Gigafactory - Fremont
GA 4.5 Glazing Automation
General Assembly Model Y

Request for Proposal and Quote

Revision 00

Tesla Inc.

45500 Fremont Blvd., Fremont, CA, 94538

April 1, 2026

© 2026 Tesla, Inc. Proprietary and Confidential.

Contents

Expectations 3
1 Tesla Philosophy/Mindset 4
2 Project Overview 5
2.1 Scope Overview 5
2.2 Design Metrics 22
2.3 Design Goals 23
2.4 Project Timing Overview 24
2.5 Project Schedule (Phases) 25
2.6 Site Working Hours 25
2.7 Key Tesla Contacts 26
2.8 Facilities Information 27
3 Process Overview 28
3.1 Commodity List 28
3.2 Overall requirements applied to all commodities. 30
3.3 Product Requirement and Variants 32
3.4 Design Requirements for Steel Structure 33
3.5 Design Requirements for Mainline Conveyance 34
3.6 Design Requirements for Take-out/In Strategy 34
3.7 Design Requirements for Material Lineside Presentation 35
3.8 Design Requirements for Manual Hoists/Lift Assists 35
3.9 Design Requirements for a Flexible Line 36
3.10 Design Requirements for Manual Stations 37
3.11 Design Requirements for a Module Line Design 40
3.12 Design Requirements for Maintenance 40
4 Line Design 41
4.1 Capacity 41

©Copyright 2024 Tesla, Inc. All rights reserved. Proprietary and confidential business information subject to and disclosed under applicable Non-disclosure Agreement and/or exempt from FOIA disclosure

4.1.1 Rate 41
4.1.2 Robot Utilization 41
4.1.3 Operator Utilization 41
4.2 Quality ... 41
4.3 Process Flow ... 42
4.3.1 Subprocess 44
4.4 Product and Process Data Exchange ... 45
4.5 EHS Requirements ... 45
5 Conceptual Layout ... 48
6 Equipment and Installation Overview ... 49
6.1 Equipment Supply List ... 49
6.2 Tesla or Line Integrator Provided Equipment ... 50
6.2.1 Industrial Robot 51
6.2.2 Station Operator Service Poles 52
6.2.3 Adhesive Systems 56
6.3 Construction/Installation Equipment ... 57
6.4 Integration/Commission ... 59
7 Responsibilities ... 60
7.1 Process and Tooling Design ... 60
7.2 Shipping, Packaging, Incoterm ... 60
7.3 Equipment Installation ... 61
7.4 Electrical guidelines and panel design ... 61
7.5 Electrical, Controls and Robotics Support ... 61
7.6 Virtual Commissioning and Robot Simulation ... 62
7.7 Control Systems ... 63
7.8 Robotics ... 66
7.9 Human Machine Interface (HMI) ... 67
8 Specifications and Deliverables ... 69
8.1 Tesla Standards, Templates, and Checklists ... 69
8.2 Equipment Performance Validation & Deliverables ... 74
8.3 Final & Mid-Project Documentation Deliverables ... 75
8.4 Training and Support Deliverables ... 77

©Copyright 2024 Tesla, Inc. All rights reserved. Proprietary and confidential business information subject to and disclosed under applicable Non-disclosure Agreement and/or exempt from FOIA disclosure

9 Commercial Items 78
9.1 Buyoff Milestones 78
9.2 Line Integrator Proposal Deliverables 78
9.3 Project Management 79
9.4 Payment Terms and Milestones 81
9.5 Engineering Change Request / Order Process 81
9.6 Intellectual Property 82
9.7 Delay & Other Penalties 82
9.8 Service and Warranty 82
10 Appendices 84
10.1 Line Integrator Bid Submission Confirmation 84

Revision History

Rev #	Description of Change	Date	Author
00	• Initial Release	3/16/2026	Eliseo Urrutia Beltran/ Kevin Samuel Rajan
01	•		
02	•		
03			

Expectations

The Line Builder must read all sections of this RFQ and its reference documents and understand the ask in detail. If any questions related to this RFQ surface, they must be brought forward to Tesla in the proposal phase.

BMS-0000314 - Developing Discrete Manufacturing Equipment is the foundation and framework on which this project will be driven from start to finish. ALL project milestones, deliverables, and payment milestones will be derived from this document. The Line Builder MUST read and understand this document.

©Copyright 2024 Tesla, Inc. All rights reserved. Proprietary and confidential business information subject to and disclosed under applicable Non-disclosure Agreement and/or exempt from FOIA disclosure

The term "vendor", "Line Integrator" and "Line Builder" are used interchangeably throughout this RFQ. These terms refer to the enterprise/company who bids and owns the scope of this RFQ.

1 Tesla Philosophy/Mindset

We value a "partner" approach between the line builder and Tesla engineers. This can only be achieved through:

- Clear and constant **COMMUNICATION**
    - Communication should travel via the shortest path necessary to get the job done, not`1 through the "chain of command".
    - Communication should be done through **ALL** stakeholders to keep everyone on the same page. Must include all leads from Line Builder and Tesla.
    - All correspondence should happen within **48 hours** from the initial request.
- Full **TRANSPARENCY**
    - All risks should be communicated to Tesla as soon as they are discovered (no matter how small they seem).
    - All impacts to material delivery, milestones, & cost should be immediately communicated to Tesla.
    - JIRA items should be followed up on with **48 hours** to keep momentum.
    - All time off should be planned and communicated ahead of time with Tesla. The Line Builder must communicate who will cover all leads in case of absence. This includes holidays as well.

©Copyright 2024 Tesla, Inc. All rights reserved. Proprietary and confidential business information subject to and disclosed under applicable Non-disclosure Agreement and/or exempt from FOIA disclosure

2 Project Overview

2.1 Scope Overview

The project as defined by this Scope of Work (SOW) is to design, manufacture, install, and commission a turn-key project, Glazing and Auto-Decking Robots for Backlite (BL), Roof Glass (RG) and Windshield (WS) at Model Y Assembly line:

1. **Glazing Future Process – Floor Level Automation**

WINDSHIELD AND ROOF GLASS NEW AUTOMATION

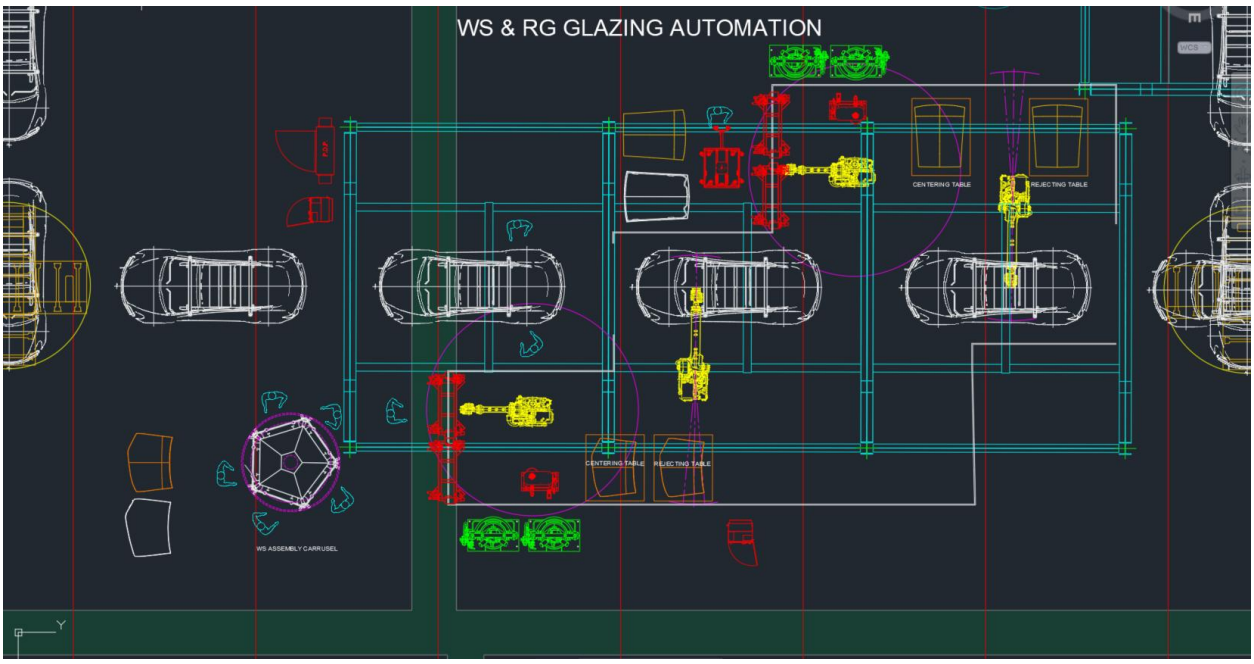

©Copyright 2024 Tesla, Inc. All rights reserved. Proprietary and confidential business information subject to and disclosed under applicable Non-disclosure Agreement and/or exempt from FOIA disclosure

BACKLIGHT NEW AUTOMATION

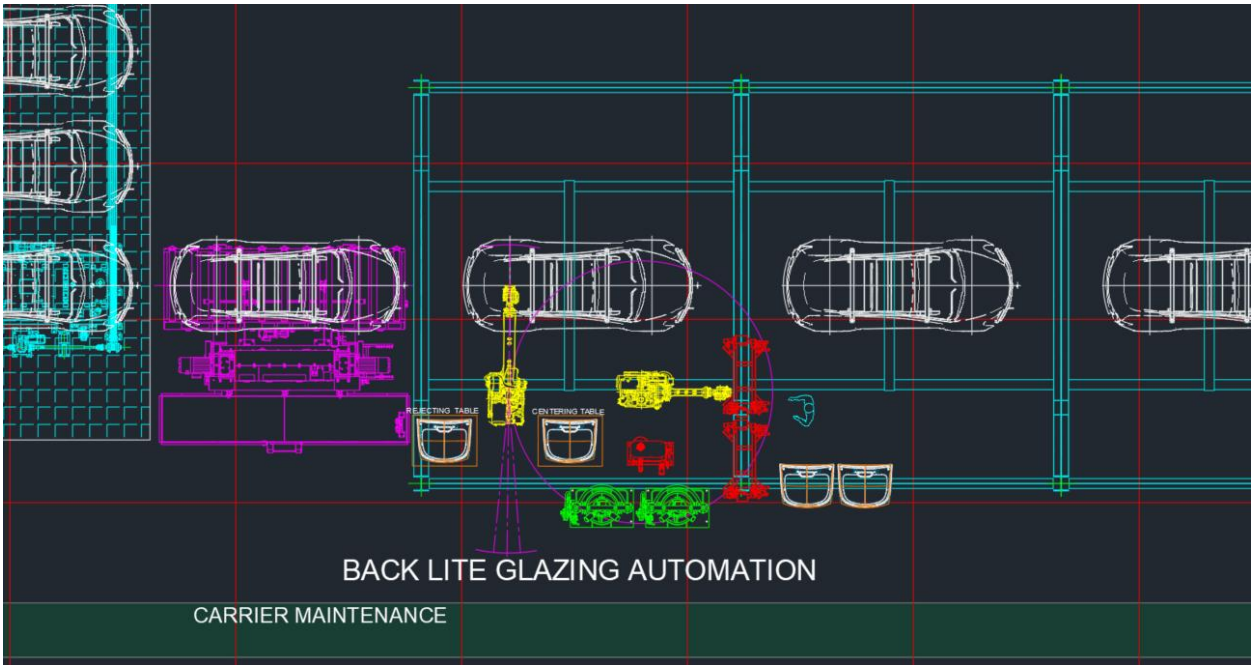

OPTION 2 BACKLIGHT CELL ADDING DECKING ROBOT ON CURRENT SEMI-AUTOMATED STATION

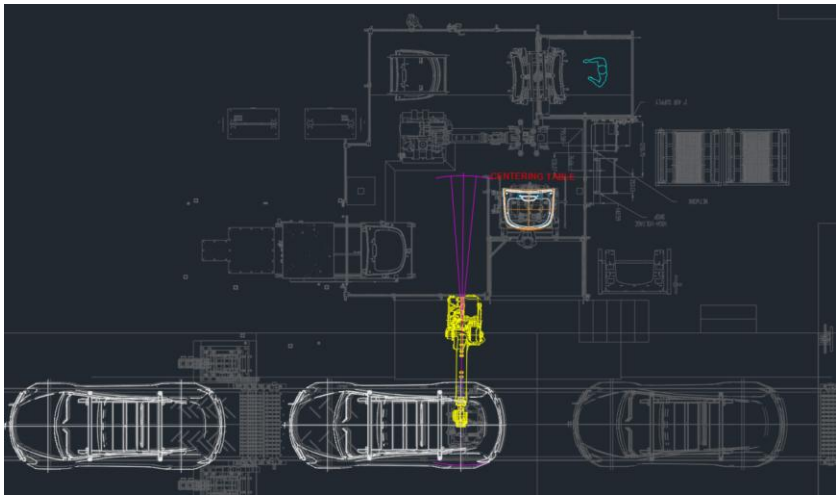

©Copyright 2024 Tesla, Inc. All rights reserved. Proprietary and confidential business information subject to and disclosed under applicable Non-disclosure Agreement and/or exempt from FOIA disclosure

GENERAL EQUIPMENT

- The new Glazing and Auto-Decking Robots for Backlite (BL), Roof Glass (RG) and Windshield (WS) at Model Y Assembly line will be stop station with roller bed conveyor system and centering device provided by others. (Engineering design will be provided by Tesla) however it is responsibility of the vendor to review and work together with the vendor and modify the positioning device as necessary to deliver the best accuracy at positioning the vehicle.
- New Gluing robots will be FANUC R-2000iC165F with additional servo motor for rotating nozzles at urethane tower provided by Tesla. However, vendor is responsible for confirming the robot has proper software, robot model, cabinet, special configurations etc.
- Vendor is responsible for robot's riser's calculations and manufacturing.
- New Glazing robots will be using Nordson dispensing system provided by Tesla.
- New Glazing robots will be using VMT G2 Spin Top 3D provided by vendor.
- New Decking robots will be FANUC R-2000iC210L provided by Tesla. However, vendor is responsible for confirming that the robot has proper software, robot model, cabinet, special configurations etc.
- Vendor is responsible for robot's riser's calculations and manufacturing.
- New decking robots will be using ISRA vision systems SHAPEMATCH3D-FLEX for decking and Post insertion checks, provided by vendor.
- Siemens PLC will be used for Glazing and Auto-Decking Robots for Backlite (BL), Roof Glass (RG) and Windshield (WS) at Model Y Assembly line. Provided by vendor.
- Vendor is responsible for PDP and calculations for PDP and all the peripherals like light curtains, fence, safety devices etc.
- The vendor is responsible for providing all the controls equipment for PDP and PLC (circuit breakers, I/O blocks, safety blocks, cables, Siemens HMI, junction boxes etc.)
- Vendor is responsible for designing nozzles, shaft and holder nozzle at the application tower according to the urethane specifications WS, RG and BL see specs below:

WINDSHIELD

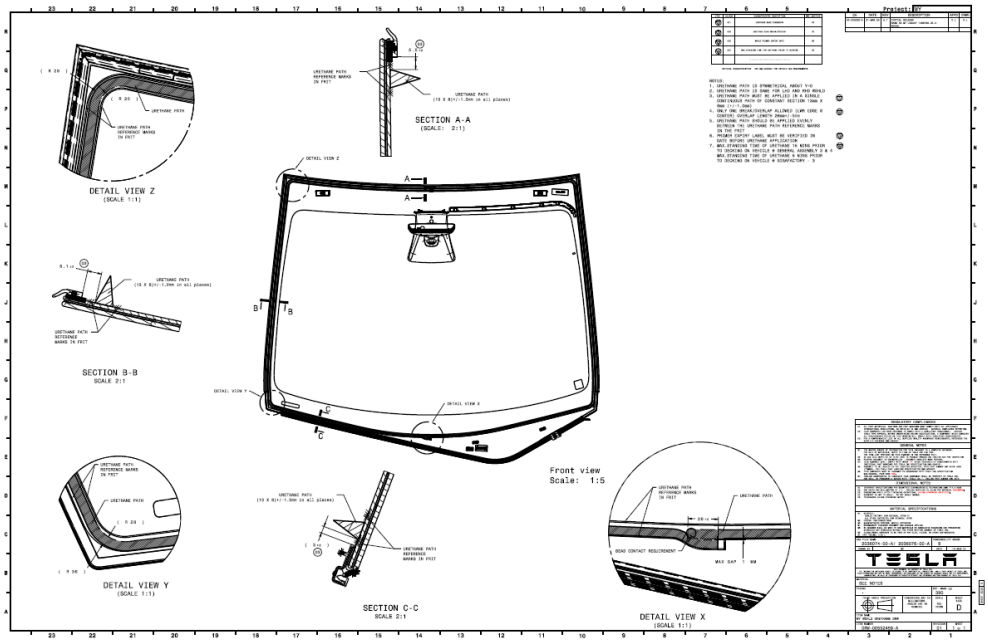

©Copyright 2024 Tesla, Inc. All rights reserved. Proprietary and confidential business information subject to and disclosed under applicable Non-disclosure Agreement and/or exempt from FOIA disclosure

ROOF GLASS

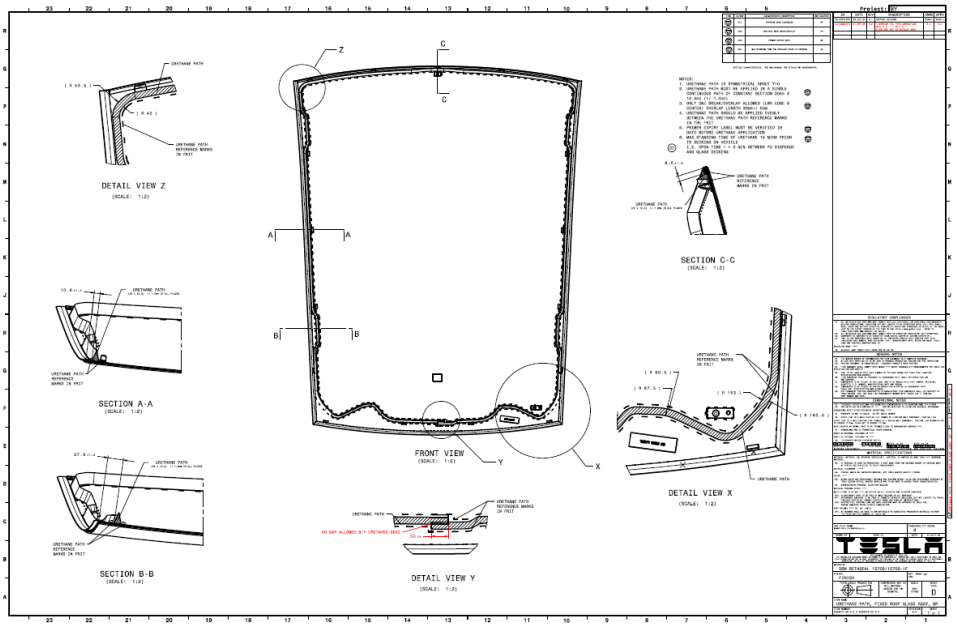

BACKLIGHT

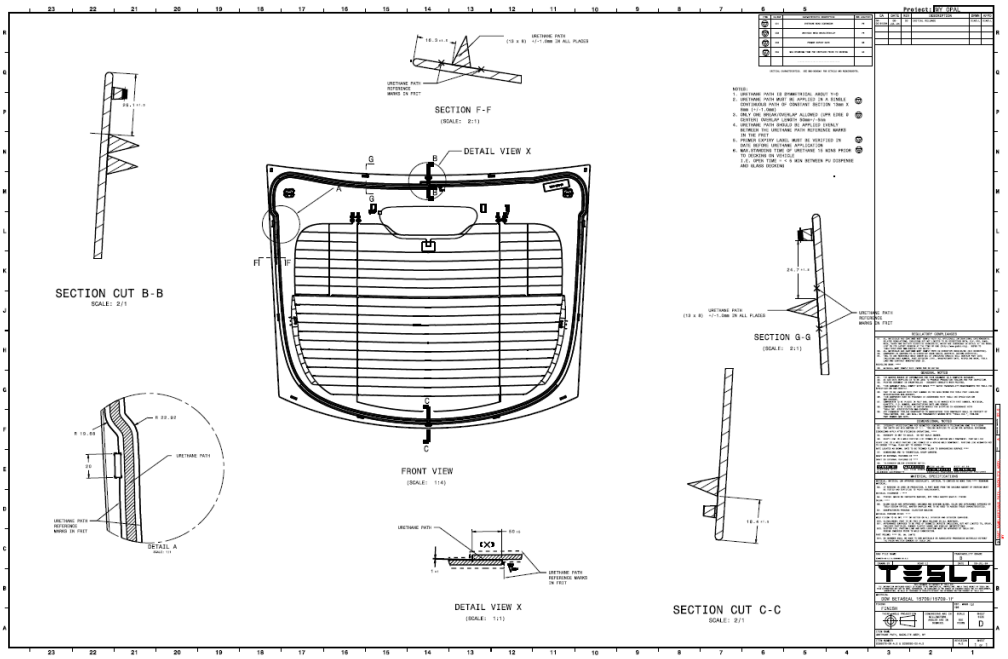

©Copyright 2024 Tesla, Inc. All rights reserved. Proprietary and confidential business information subject to and disclosed under applicable Non-disclosure Agreement and/or exempt from FOIA disclosure

BACKLIGHT CELL OPTION ADDING DECKING ROBOT ON CURRENT SEMI-AUTOMATED STATION

- The current Backlight Glazing Cell still with the same semi-automated process. The integration of the new decking robots the vendor is responsible for modify and reprograming the current urethane robot and PLC due to interaction between the current robot and new decking robot.
- The current robots and new auto decking robot will have recovery programs / homing.
- The current PLC and PDP will be the current for integrate the new robot for auto decking process. The vendor is responsible for provide all the controls equipment for PDP and PLC. (circuit breakers, I/O blocks, safety blocks, cables, junction boxes etc.)
- Vendor need to verify the current PLC and PDP have the capacity for integrate the new decking robot, safeties, centering table and roller bed positioning device etc.
- The vendor is responsible for all necessary safety equipment, safety fence extension, light curtains, scanners, etc. for integrate the new auto decking robot.
- The vendor is responsible for reprograming current HMI's (siemens) and 1 new HMI's (Siemens) with the new additions for auto decking robot, centering table, output shutter tables etc.
- The vendor is responsible for remove and relocate any interference: mechanical, electrical and equipment for integrate the auto decking robots.
- The vendor is responsible for relocate and redesign the current lift assists for manual decking when the Backlight is rejected for manual installation in the next station.
- The process for auto decking backlight will be stop and go.

BACKLIGHT CELL LAYOUT - CURRENT

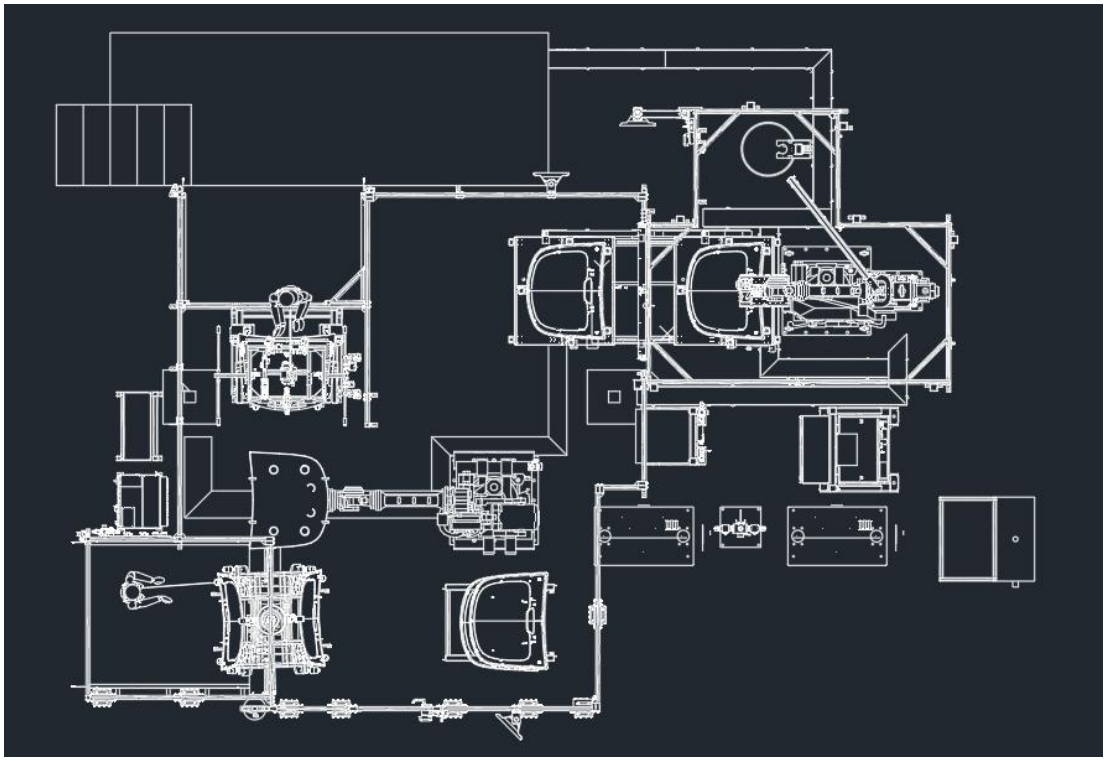

©Copyright 2024 Tesla, Inc. All rights reserved. Proprietary and confidential business information subject to and disclosed under applicable Non-disclosure Agreement and/or exempt from FOIA disclosure

APPLICATION TOWER/PEDESTAL

- The design of the application tower and integration of the rotating servo for nozzle, VMT G2 Spin Top, cleaning system, maintenance platform and all the peripherals electrical/ mechanical is vendor responsibility.

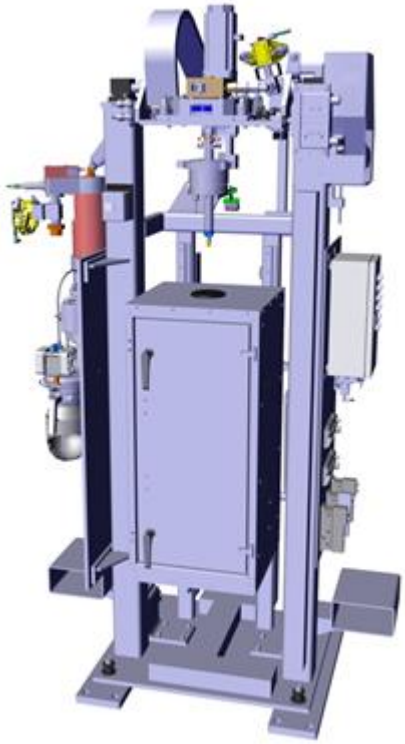

- Integration of the new Glazing and Auto-decking robots, the vendor is responsible for integrating Nordson dispensing system on the urethane application towers see table below:

BILL OF MATERIAL 01 Qty 1, Fully Temperature-Conditioned Prometer-G w/ Dual Unloaders	
EQUIPMENT DESCRIPTION	**QUANTITY**
PRO-METER G-PLC, T/C	1
1K CE20 VALVE, STAND-ALONE (INCLUDES TRANSDUCER)	1
CONTROLLER, SINGLE, PRO-METER G-PLC, HEAT/COOL TCU	1
RHINO,XD3,55G,65:1,CS,2H ELEC CONTROLS,LG FRAME,GLASS,T/C	2
HOSE STAND, GLASS	1
T/C BRAIDED SS PTFE 1.25"/1.5" DIA - 8FT - INCLUDES COVER	2
FULL T/C SS HOSE 1.25/1.5" DIA STD PACKAGE - UP TO 48FT - INCLUDES COVERS	1
T/C BRAIDED SS PTFE WHIP HOSE FOR URETHANE - UP TO 16FT - INCLUDES COVER	1
MISC ACCESSORIES AND FITTINGS	1
RHINO PUMP FLUIDS KIT	1

©Copyright 2024 Tesla, Inc. All rights reserved. Proprietary and confidential business information subject to and disclosed under applicable Non-disclosure Agreement and/or exempt from FOIA disclosure

- Application towers will be using VMT G2 Spin Top 3D hardware and software with new compact cabinet for monitoring quality of the bed application and vendor is responsible for integrating this equipment into the application tower.

1 pc. VMT G2 Spin Top 3D incl. robot technology package

1 pc. VMT Compact Cabinet consisting of:
(1) PC installed in Rittal control box
(1) VMT-MSS license with HW dongle, English version
(1) Operating system, MS Windows 10 English version
(1) Network card for PC installation
(1) External Keyboard, Mouse and Monitor
(1) N-Tron Ethernet Switch
(1) 24v Power Supply
1 pc. Software license
1 pc. Set of robots rated cables each 10 m.
General hardware or small parts for mounting

©Copyright 2024 Tesla, Inc. All rights reserved. Proprietary and confidential business information subject to and disclosed under applicable Non-disclosure Agreement and/or exempt from FOIA disclosure

CLEANING SYSTEM

- Application towers will be using cutting system and photo sensor for detecting cleaning nozzles when the purge or cleaning process is required. vendor is responsible for designing the mechanical cleaning system. See picture below for reference:

- Application tower must have an ergonomic, service and maintenance accessibility platform.
- Application tower must have a container bucket for waste material.

©Copyright 2024 Tesla, Inc. All rights reserved. Proprietary and confidential business information subject to and disclosed under applicable Non-disclosure Agreement and/or exempt from FOIA disclosure

SHUTTLE WITH CENTERING TABLE

- Vendor is responsible for designing and providing centering tables for Windshield, Roof Glass, and Backlite. Also, the new centering table will be equipped with Balluff displacement transducer X-Y for taking a measurement for every glass.
- New rejecting tables for BL, RG & WS will be with the capability to reject glasses from the automated cell if the urethane robot and decking robot have a bad bead or it is not possible to decking (Same as Austin design). Also, it will be designed ergonomically to pick up the rejected glass with lift assist provided by vendor.

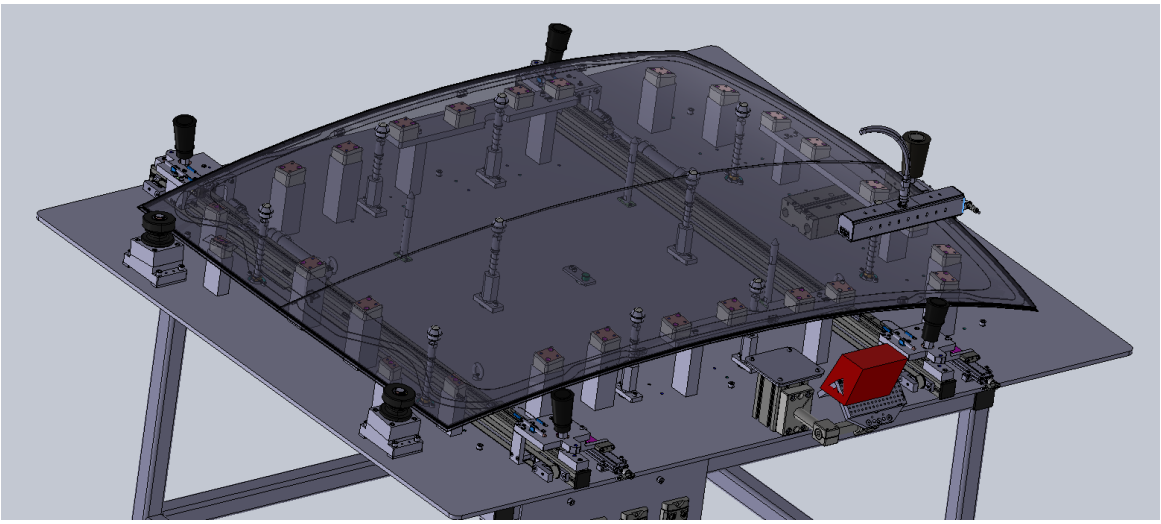

- Centering tables must have scanner for associate glass PN to the VIN number and ultrasonic sensors for detection of the correct PN of the glass loaded (Poka yoke) on the centering table.
- Vendor need to perform a repeatability study of each shuttle with centering table for the FAT.
- Vendor is responsible for all necessary safety equipment, safety fence, light curtains, scanners, etc. for integrating the new shuttle with centering table.

©Copyright 2024 Tesla, Inc. All rights reserved. Proprietary and confidential business information subject to and disclosed under applicable Non-disclosure Agreement and/or exempt from FOIA disclosure

- Vendor will provide grid calibration for ISRA vision system and grid calibration for suction cup to verify position of the cameras and suction cups on the EOAT. Robots will have a routine for running these programs for ISRA calibration and suction cups to check.

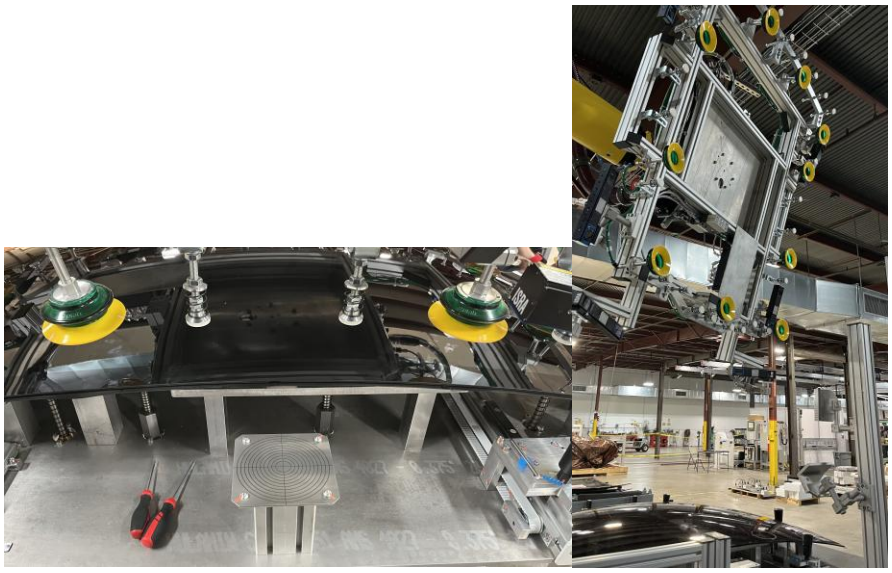

- Vendor is responsible for providing and programing 6 new HMI's (Siemens) 2 per zone with the new gluing and auto decking robots, centering table, output shutter tables etc. (see pictures below for reference).

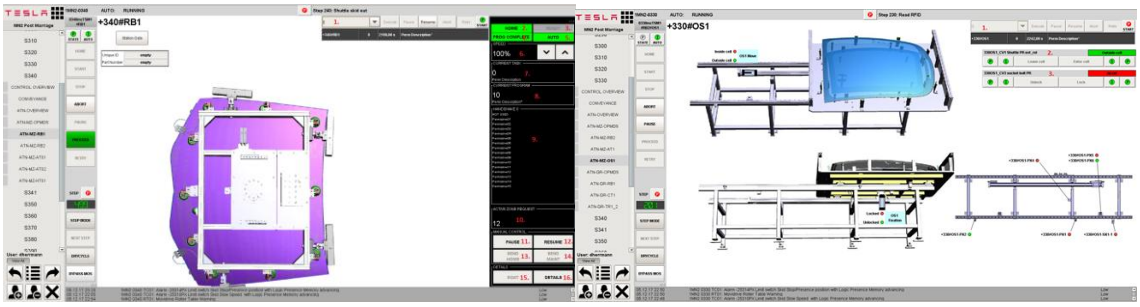

©Copyright 2024 Tesla, Inc. All rights reserved. Proprietary and confidential business information subject to and disclosed under applicable Non-disclosure Agreement and/or exempt from FOIA disclosure

LIFT ASSITS AND LOADING TABLES WITH CENTERING

- Vendor is responsible for designing the new loading tables with centering WS, RG, and BL
- Vendor is responsible for designing the new inspection tables with centering WS, RG, and BL if the urethane bead does not pass the gluing robot must be dropping the glass on the loading table for operator inspection and make the decision to continue the process or reject the glass
- Vendor is responsible for designing the new lift assists for picking WS, RG, and BL from racks to the loading tables with centering

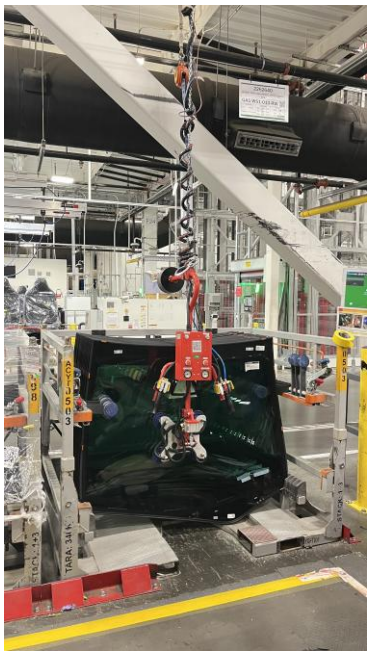

- Vendor is responsible for designing a new Windshield Sub-assembly carousel with 5 stations and lift assist for transfer WS to loading table.

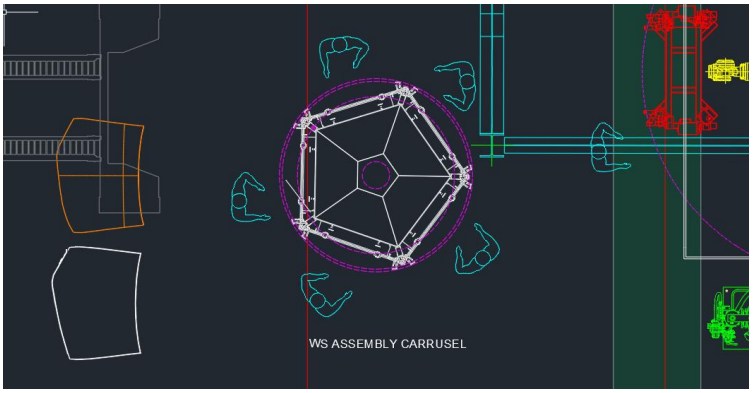

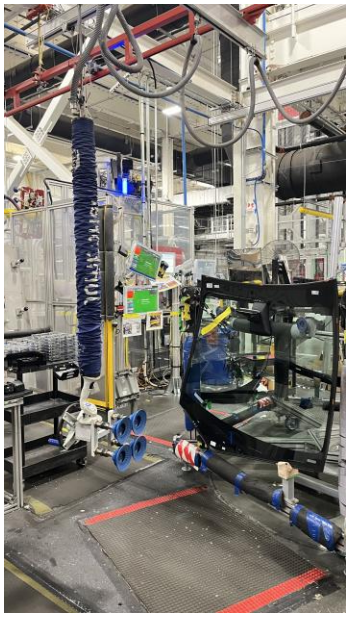

©Copyright 2024 Tesla, Inc. All rights reserved. Proprietary and confidential business information subject to and disclosed under applicable Non-disclosure Agreement and/or exempt from FOIA disclosure

- Vendor is responsible for designing the new lift assists for manual decking when the BL, RG and WS if is rejected for manual installation in the next station.

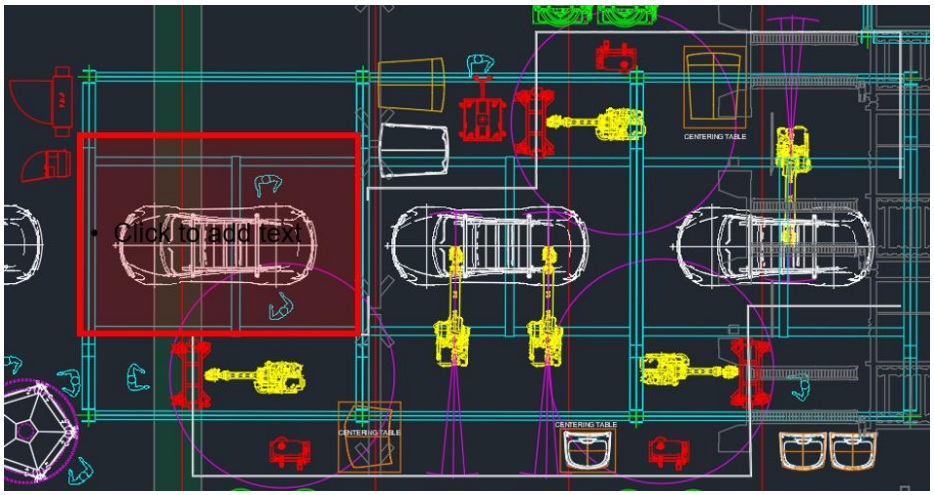

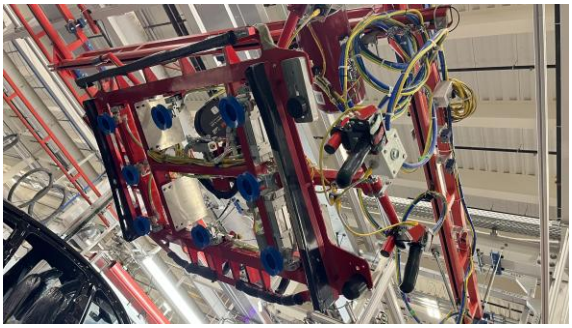

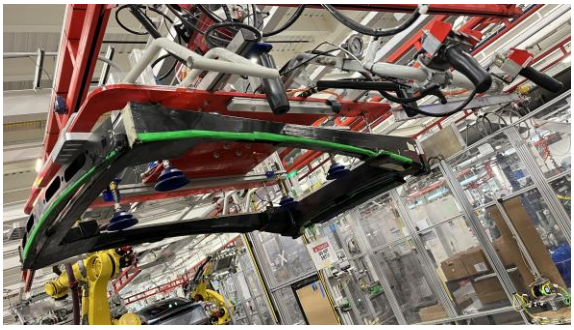

- The process for manual decking WS, RG & BL will be stop and go.
- The lift assists will be protected with home safety positions before to release the vehicle from the manual station and avoid crashes.
- Positioning Device for roller bed manufacturing and integration will by others, (Engineering design will be provided by Tesla) however is responsibility of the vendor review and work together with the vendor modifying the positioning device as necessary to deliver the best accuracy at positioning the vehicle.

©Copyright 2024 Tesla, Inc. All rights reserved. Proprietary and confidential business information subject to and disclosed under applicable Non-disclosure Agreement and/or exempt from FOIA disclosure

ROBOT DECKING EOAT

- New robots R-2000iC/210L Plus will be used for this project (provided by Tesla). The vendor must confirm that the robot has the capability with RoboCAD analysis.
- Robot riser, dress pack, TCP tool, etc. will be provided by vendor.
- Robots will be with error recovery programs and maintenance programs.
- Decking stations must be equipped with ultrasonic sensors UC4000-L2-E5-V15 to detect hood and liftgate is closed before Robots decking process and avoid robots' crashes.
- Decking stations must be equipped with ultrasonic sensors UC4000-L2-E5-V15 to detect glass decked on the vehicle and avoid double deck glasses.

- EOAT will be the same design as Austin Factory (see picture below).

WINDSHIELD DECKING

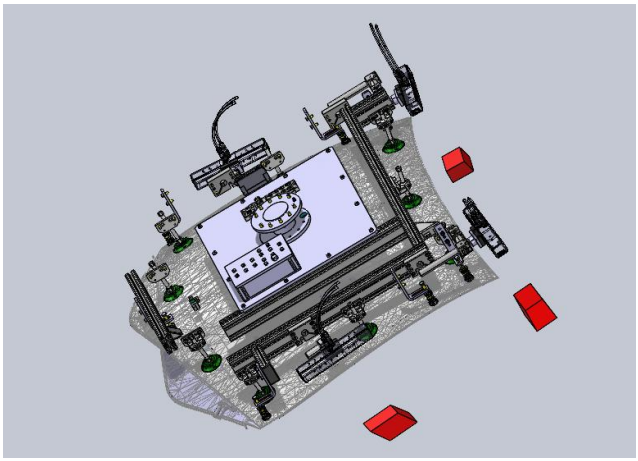

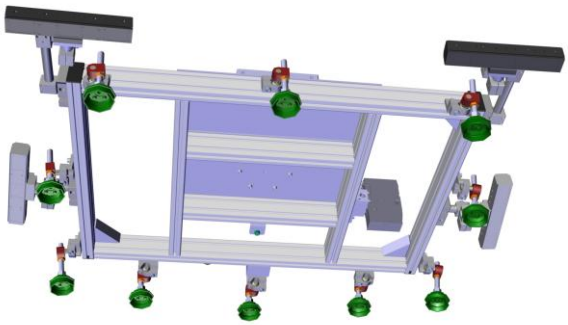

ROOF GLASS DECKING

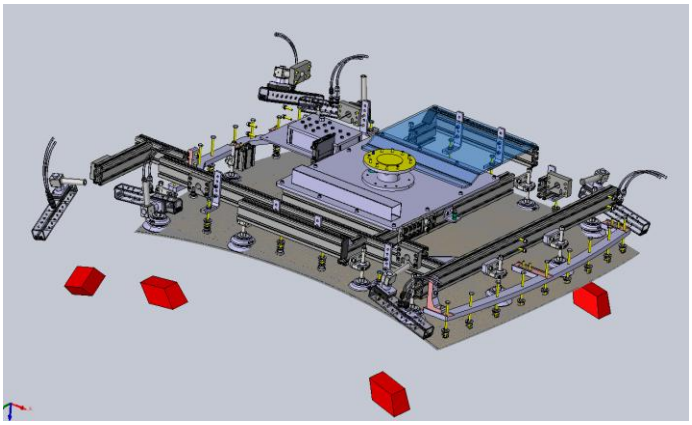

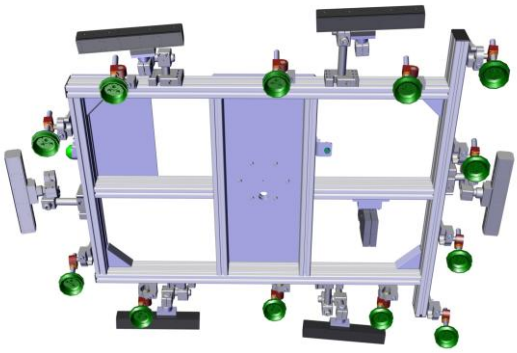

BACKLIGHT DECKING

©Copyright 2024 Tesla, Inc. All rights reserved. Proprietary and confidential business information subject to and disclosed under applicable Non-disclosure Agreement and/or exempt from FOIA disclosure

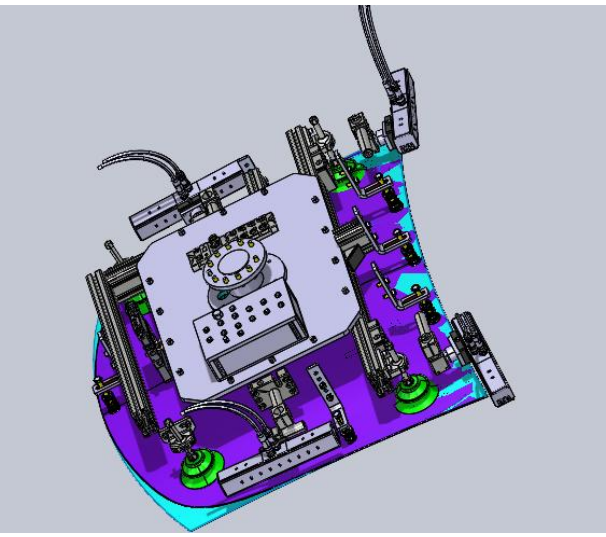

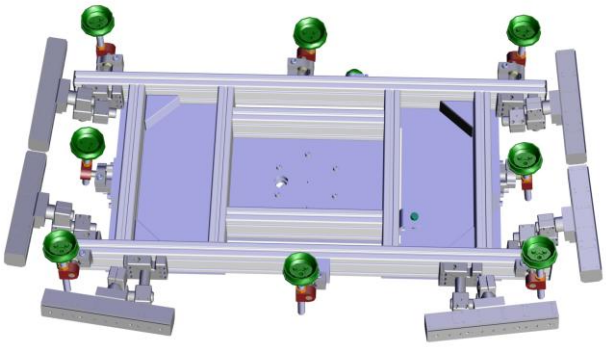

ROBOT GLUING EOAT

- New robots FANUC R-2000iC165F will be used for this project (provided by Tesla). The vendor must confirm that the robot has the capability with RoboCAD analysis.
- Robot riser, dress pack, TCP tool, etc. will be provided by vendor.
- Robots will be with error recovery programs and maintenance programs.
- EOAT will be the same design as Austin Factory (see picture below).

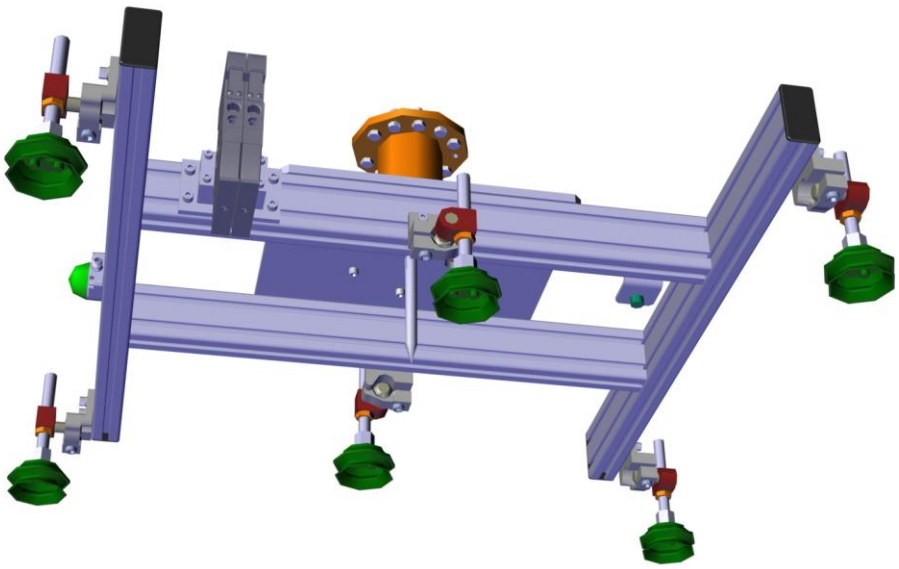

©Copyright 2024 Tesla, Inc. All rights reserved. Proprietary and confidential business information subject to and disclosed under applicable Non-disclosure Agreement and/or exempt from FOIA disclosure

ISRA Measurement Targets

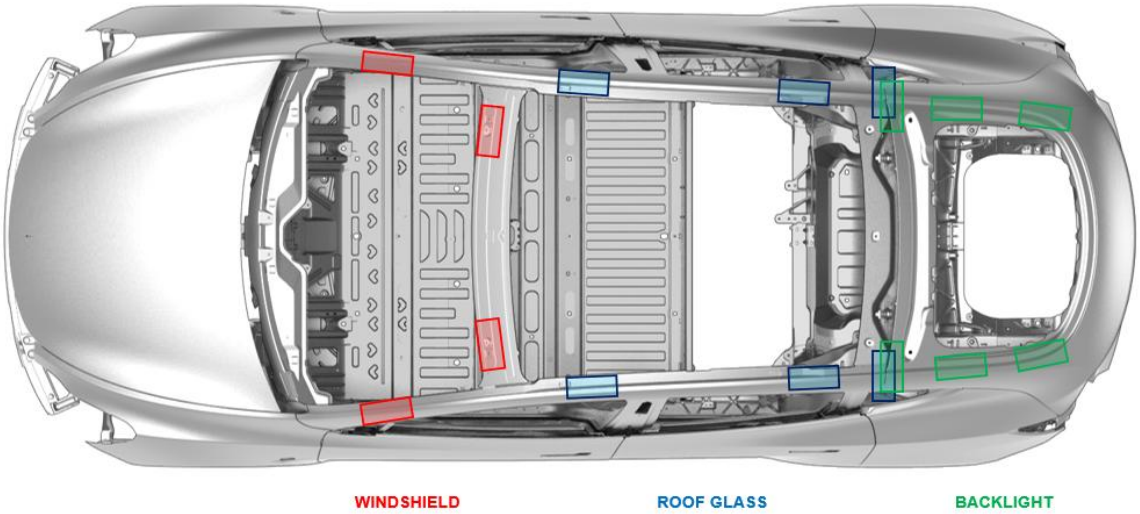

- ISRA Vision System SHAPEMATCH3D-FLEX will be used for decking and Post Insertion Check (PIC) with Yield 99%.
- ISRA Training will be provided on site for control and equipment engineers (8 students)
- ISRA Vision System needs all the color pallet to calibrate the Vison System during commissioning.
- Translucent (Black) Canopy will be provided by vendor to avoid reflections during the decking process.
- New Fence will be opaque / black on top sides to avoid reflections during the decking process.
- VMT 3D Spin Top System will be used for bead monitoring at windshield, roof glass and backlite. With yield 99%
- VMT 3D Spin Top Training will be provided on site for control and equipment engineers (8 students).

Consider 4 weeks of shutdown for integration and process validation before SOP

Two weeks of support with robot, PLC, VMT 3D Spintop and ISRA engineers during production.

©Copyright 2024 Tesla, Inc. All rights reserved. Proprietary and confidential business information subject to and disclosed under applicable Non-disclosure Agreement and/or exempt from FOIA disclosure

1) The priority of this program is to design a Glazing Auto-Decking Robots for Backlite (BL), Roof Glass (RG) and Windshield (WS) at Model Y Assembly line. capable of producing a target rate of 45 sec of cycle time. The target production rate of this project will be to 8,500 units per week.
2) The scope of this project is for a Line integrator to provide Glazing Auto-Decking Robots for Backlite (BL), Roof Glass (RG) and Windshield (WS) at Model Y Assembly line. Space in the Tesla GA 4.5 - Fremont is limited and lines should be designed as dense as possible. It will be a collaborative effort between the selected Line integrator and Tesla engineers to determine how this limited space will affect the throughput of each line. This should be determined during the bidding phase and called in the final proposal.
3) The scope of this project also includes the design, manufacture, install, and commission of all process equipment such as dispensing system, glue towers, lift assists, assembly fixtures, positioning system, automation Cell equipment, ergonomic equipment (eg. manual station platforms), tool rail structures for manual process stations.
4) The production lines under bid will be on the first Floor of the GA 4.5 - Fremont. Please refer to the respective facility layouts in this package and mentioned further and the installation document regarding details, showing guidelines and requirements that Line Integrators need to conform to during the tenure of the project. Factory requirements for structural and utilities needs to be provided by the vendor two weeks after project kick off. For electrical and network requirements please refer to the scope delineation document, TS-0031736, and "How to complete facility design EQM For PDPs" attached in the RFQ package. For structural requirements please refer to TS-0031799 that provides info on how to provide structural loading, baseplates, robot reinforcements, and pits and mezzanine requirements. Requests for pits should be provided by the vendor 2 weeks after design kickoff since the construction of building and concrete details need to be ready ahead of time. It is preferable not to use 7th axis RTUs for robots on elevated floors since the deformation and floor levelness on thin slab will significantly affect the performance. It is the vendors responsibility to provide levelness, and anchoring buyoffs for these components if used on 2F, or 2M of the building. Vendor can provide additional concrete pad requests for these units based on the size and the process layout in case they are needed to solve process target.
5) Tesla is prone to a fast-paced, rapidly changing environment. Line integrators and bidders should note that 3D math of any sort may be subject to change during the process. Vendors and Line Integrators should protect or be ready to change or modify the design of tooling or equipment whenever and wherever needed per Tesla's approval and direction.
6) The intended space for this scope is limited and may not accommodate every Process Sequenced outline in this proposal. It is up to the Line integrator to provide a layout that solves for maximum automation for the major module lines and provide as much space as possible for the sub-assembly lines.
7) Tesla will provide a factory layout footprint allocated for this scope and a concept layout for each line that shows the station pitch, overall adjacent material delivery aisles, an initial assumption of equipment that are needed for process for each station, and the parts that will be conveyed to this area based on other scopes. The Vendor is free to modify and propose improvements to the layout if the modifications are within the footprints provided. Scope for

©Copyright 2024 Tesla, Inc. All rights reserved. Proprietary and confidential business information subject to and disclosed under applicable Non-disclosure Agreement and/or exempt from FOIA disclosure

expanding the factory space is limited and the vendor must work within the footprint and concept layout provided in executing the line. Vendor is responsible for considering adequate full/empty buffers within the given space, and the number of skid/carrier/pallets required in the conveyance loop based on time studies and simulations for optimized operation of the line.

In response to the Request for Proposal ("RFP")/Request for Quotation ("RFQ"), the Line Builder is asked to provide a turn-key solution proposal, including detailed cost breakdown, technical concept, sequence of operations, project timeline, long lead items list and headcount plan (breakdown of local vs outsourced resources). Proposals shall meet the design requirements and metrics, targets and goals specified in Specification Document. More detail can be found in Section 8 of this document.

©Copyright 2024 Tesla, Inc. All rights reserved. Proprietary and confidential business information subject to and disclosed under applicable Non-disclosure Agreement and/or exempt from FOIA disclosure

2.2 Design Metrics

Below is a high-level summary of requirements.

Design Metric	Metric Requirement	Notes
Jobs/Week & Cycle Time	45 Seconds	Assumption: 8,500 units/week
Technical Availability	(95%)	Line Builder Requirement (Tested by Burst Build)
Tooling measurement accuracy	100% in tolerance Cp/CpK of 1.67	Refer to **TS-0004835** and **TS-0004844**.
Automation ratio – Material Handler	Minimized	- Material handler lift assists shall be used where the sub-assembly is too large or too heavy to be lifted by a human unassisted (Refer to ***TS-0011963*** Safety Specification for Equipment and NA Ergonomic Target Guidelines for restrictions on weight/dimensions) - All exceptions need to be reviewed with Tesla before design buy-off - The design of all lift assists should be catered for manual operations by default unless explicitly specified by Tesla to use automation for a certain process.
Automation ratio – Part feed	Minimized	- Automated and Manual options should be presented with rack design for feasibility for all parts. - All stations need to be protected for manual infeed for back-up and use in commissioning phase in case the material delivery automation is not ready. - It is up to Tesla's discretion for design buy-off on for part feed type (auto or manual) or any exceptions.
Part load error proofing	100%	All parts (including studs and bolting) being loaded should be 100% error proof with Proximity switch detection and mechanical Poka-Yoke. This includes double sheet error proofing. - Jigs, fixtures, and lift assists used in manual operations should have appropriate mechanical poke yokes wherever applicable. - Jigs, fixtures, and material handlers used in automatic operations should have a minimum of part presence proximity sensors for each part in addition to mechanical poke yokes wherever applicable.
Operator Utilization	85%	If beyond or below requirement, approval required from Tesla before design buy-off.
Robot utilization	Max 85%	If beyond or below requirement, approval required from Tesla before design buy-off.
Automated Conveyance between lines	Minimized	- Automated transfer to be considered between lines. - electrical connections and programming for PLC to PLC for the downstream subs is included in this scope - Offline buffer and allocated space should be accounted for
Redundancy & Single-Point Failure	50% Output Minimum	- Single Point failures identified on the PFME will need to have backup strategies that allows the line to run at 50% output

©Copyright 2024 Tesla, Inc. All rights reserved. Proprietary and confidential business information subject to and disclosed under applicable Non-disclosure Agreement and/or exempt from FOIA disclosure

2.3 Design Goals

Design Goals	Notes
Minimum equipment quantity	Minimize the shop-wide equipment count by maximizing throughput.
High equipment reliability	Preference will be given to standard equipment that has been proven in high volume production lines resulting in the best possible Mean Time Between Failure.
Line Maintainability	Line layout, tooling and equipment design should allow for easy access for maintenance personnel resulting in the best possible mean time to repair. Minimum of 600mm path to and around all equipment. For individual fixtures, system shall be designed so that maintenance and replacement of fixture can with 0 downtime and throughput impact to the line.
Single level process	Processes should be designed at floor level. Large steel structures over 5 meters should be avoided where possible. Exceptions should be reviewed with Tesla.
Insertion and removal of build pallets in all conveyance systems	Each line should include the ability to manually insert build pallets at the beginning of conveyance lines, and manually extract the completed assembly or body at the end of the line.
Maintenance Kickout Zones	Each conveyance line shall have a maintenance kickout spur or loop that provides a human safe environment for technicians to work on carriers/skids/pallets. Maintenance should have the ability to send selected carriers to the maintenance spur via conveyance HMI. Maintenance space should be equipped with a calibration jig to ensure all pallets/skids/carriers are dimensionally repeatable. Vendor should provide accurate faro reports of the skids/carriers that shows the tolerances and errors in fabrication are within the limits. If the kickout is intended for part repair or part takeout, Station controller will be added (service Pole with tangent and scanner) for tracking the VIN should be provided in that area.
Process for manual part load	Easy process for operator access and ergo friendly. Reference standards where applicable.
Process Automation	Vendor can propose automation where this a significant opportunity to reduce headcount.
Small Parts Loading	All small parts should have Bin holders withing the load station to eliminate unnecessary walking or wasted movement.
Common Tooling	Tooling should be designed to be common between all models whenever possible. If not, quick disconnect/connect will be necessary to facilitate easy tool switch. All adjustability in common tooling should be independent by model.
Nonvalue-Added movement	Vendor should eliminate as much nonvalue added movement as possible. Ex. Idle tables and/or robots for only part transfer. Vendor to perform simulation and time studies after kick-off to evaluate the number of buffers required to reach adequate cycle times during transfers.
Design for easy removal of fixtures and robots	Robot removal and insertion should happen within 2 hours to lower impact to throughput. Removal systems should be shown in simulation/Design.
Optimize Volume	Optimize volume by considering robot controllers, transformers, … on platform. Utilize height of the space allocated for each line for improved volumetric efficiency. Teach pendants should be placed on the fence next to gates for robot controllers on platform. Vendor should continuously provide updates in a Navisworks .nwd file that will help with clash detection and issues from the factory that need to be resolved since this area is a brown field. Vendor should provide the .nwd file based on the reference file that is used by the factory BIM model so the layout can easily be overlayed with the factory file.

©Copyright 2024 Tesla, Inc. All rights reserved. Proprietary and confidential business information subject to and disclosed under applicable Non-disclosure Agreement and/or exempt from FOIA disclosure

2.4 Project Timing Overview

The current Project timing is subject to change. The Line Integrator should plan and propose to meet the target schedule and highlight any risks or conditions to achieving the schedule.

Reference document: ***'06. Purchasing \ Buyoff Milestones.xlsx'***

Milestone	Dates (MM/DD/YYYY)
RFQ Release	3/30/2026
CP2 Data Release to Line integrator	4/01/2026
First Technical Proposal Review Meeting	4/13/2026
Second Technical Proposal Review Meeting	4/17/2026
CP3 Data Release to Line Integrator	4/20/2026
Third Technical Proposal Review Meeting	4/24/2026
Final Proposal Submission – Technical, Quote, Timing and Resource plan	4/27/2026
Project Kick-Off/Target PO Date	4/30/2026
CP4/CP5 Data Release to Line integrator	5/04/2026
Long leads kick-off	5/11/2026
Long lead ordering completed	5/18/2026
Final Design approval (100% Mechanical design + E-plan)	Supplier to Propose
Virtual Commissioning approval	Supplier to Propose
Manufacturing Buyoff Complete (FAT)	Supplier to Propose
Installation Start @ Tesla	Supplier to Propose
Power-On (Commissioning Start)	Supplier to Propose
Start of Build in Auto	05/10/2027
Production build start	05/31/2027
Ramp to Full Rate (8,500/wk.)	06/14/2027

©Copyright 2024 Tesla, Inc. All rights reserved. Proprietary and confidential business information subject to and disclosed under applicable Non-disclosure Agreement and/or exempt from FOIA disclosure

2.5 Project Schedule

Each commodity will have a single integrated detailed schedule developed by the Line Integrator including (at a minimum) all the following project phases and milestones referenced in **BMS-0000314 - Developing Discrete Manufacturing Equipment.** Highlighted in the table below are critical timelines from the above-mentioned standard:

Project Phases	Milestone
Sourcing	20 – RFQ Release and Proposal Start
	30 – Proposal Evaluation and PO Award
Design	60 – Vendor Kickoff, JIRA Setup
	70 – Concept Design Phase, 30% E-PLAN, 40% Tooling Design
	90 – Preliminary Design Review, 60% E-PLAN, 90% Tooling Design
	110 – Preliminary Design Review, 90% E-PLAN
	130 – Final Design Approval (100% Mechanical Design & E-PLAN)
Build/FAT	150 – Pre-FAT Set-Up (Robot offline Programming)
	170 – Start of Fabrication (90% PLC)
	190 – System Tryout & Virtual Commissioning
	200 – Factory Acceptance Testing (If Applicable) & Tooling Buyoff
Installation	210 – Construction/Install
	220 - Power On (TS-0018282 Electrical Acceptance Checklist)
Commissioning/SAT	240 – PLC, Software, Communication Setup & Testing
	250 – Safety Inspection & Ready for Manual Operation (TS-0011569)
	260 – Manual Mode Debugging (T1)
	270 – Auto mode ready (TS-0010923/TS-0010610)
	280 – Fault Integration Testing (**TS-0010714**) + Dry Cycle (24 hr.)
	290 – Sustaining/EHS & SAT Approval (TS-0011667) + Training + Burst Build (Safe to Operate, Safe for production associates/maintenance)
	300 – Project Acceptance Check (**TS-0010714**) + Backups and Documents
	330 – All Jira Open Items Closed & kick off the change control process
	360 – Equipment Turnover with Spares
Start of Build	Handover Documentation Package to Tesla (Refer to Section 9.1)
25% JPH	Prove Cycle time and Throughput with parts for capacity (Refer to Section 9.1)
100% JPH	Prove Cycle time and Throughput with parts for capacity (Refer to Section 9.1)
Final Handover/Project Exit	Sign off on all tooling, design metrics and training completion.
	400 – First saleable part (SOP)

2.6 Site Working Hours

Due to the nature of Tesla and the speed at which we work, the Line integrator should be flexible during the execution phase (Install & Commissioning). This could be, but not limited to:

1. Working on Day and/or Night shift, including supervision on all shifts
2. Working on Weekends and/or Weekdays
3. Working Holidays

Tesla Requires that **ALL** Lead & Key Engineers (Mechanical, Electrical, PLC, Robot, etc.), working on the early phases of the project, to be on-site for the install and commissioning of the equipment.

©Copyright 2024 Tesla, Inc. All rights reserved. Proprietary and confidential business information subject to and disclosed under applicable Non-disclosure Agreement and/or exempt from FOIA disclosure

Due to the limited time to execute, the line integrator should consider that a skeleton team may be required to be on-site earlier to facilitate any pre-installation work or pre-commissioning work. Example: Site investigations, Floor Marking, existing MEP clash detection, pre-commissioning of most devices, such as robot dress packs/EOAT, Fixtures. Vendor should ensure that there are adequate and experienced supervisors available onsite for electrical, mechanical, and controls activities. Supervisors should be fluent in English to avoid any communication gaps onsite. Jira issues and handover documentations should be continuously getting updated and completed based on onsite activities and modifications.

2.7 Key Tesla Contacts

	Contact	Name	Email	Phone
Overall ME	Primary	Kevin Samuel Rajan	krajan@tesla.com	
Overall ME	Secondary	Anthony Cabaniss Jr	acabanissjr@tesla.com	
DFM	Primary	Eliseo Urrutia Beltran	ebeltran@tesla.com	
Controls	Primary	Kavya SudhiReddy	ksudhireddy@tesla.com	
EHS	Primary	Gerardo Ramos	gerramos@tesla.com	
Commercial (GSM)	Primary	Rosalie Lopez	rosalopez@tesla.com	
Program Manager	Primary	__	___@tesla.com	
Escalation & Management	Primary	Bryan Clagett	bclagett@tesla.com	
GA4 Equipment Engineering	Primary	William Simpson	wsimpson@tesla.com	
GA4 Controls	Primary	Hitan Patel	hpatel@tesla.com	
GA4 Maintenance	Primary	Rachell Connor	rnichole@tesla.com	
GA4 Process Engineering	Primary	Tim Fenelon	tfenelon@tesla.com	
GA4 Industrial Engineering	Primary	Tushar Patil	tpatil@tesla.com	

©Copyright 2024 Tesla, Inc. All rights reserved. Proprietary and confidential business information subject to and disclosed under applicable Non-disclosure Agreement and/or exempt from FOIA disclosure

2.8 Facilities Information

For a more complete info on site specifications please refer to “Fremont Factory Utilities Specifications” included in the RFQ package. For structural requirements and hanging loads please refer to section 3.3. The vendor is required to provide utility requirements (EQM) and structural loading and requirements based on the EQM template and CAD that will be provided in project kickoff. Vendor continuously needs to update these files from project kickoff up to final layout acceptance.

Vendor should also complete the robot layout and Robot riser specifications and anchor details based on the sheet provided in TS-0031799.

480VAC +/- 10%, 3phase, 60 Hz ± 0.5 % - 200A, 400A, or 600A will be provided from facilities. The vendor must distribute all other downstream power needs per ***TS-0031736.*** Electrical panels should be certified by a 3rd party inspection company for the UL Certification.

Clear height varies in different levels of the building. Vendor will be provided with a .nwd Navisworks file of the factory that shows all the structural beams and columns and all existing MEP. Vendor will be responsible to measure the clear heights available in the factory and provide feedback on any areas with major clash with intended equipment design.

Structural load capacity on each floor needs to be defined based on surface loads and hanging loads and existing MEP loads. Vendor should consider the step-by-step procedure provided in TS-0031799 for providing structural loading and details. These loads will be used by Tesla Structural team to superimpose all the loading from other equipment and define the ultimate load exerted on each 14mx14m bay in the building. This will be used to define the bays that will need additional reinforcement from the factory on each floor level.

Grounding requirements for the panels should be requested in the utility layout drawing on the nearest column. Vendor is responsible to provide the locations of grounding needed, in the utility drawing CAD and send it to Tesla after project kickoff. Grounding bars will be provided on columns at a 4 m elevation. For compressed air, vendor should provide the NPT size, the valve/flange type, and the flow rate. The Compressed air drops from facilities will **only be provided on columns at a 4 m elevation**. It is the vendors responsibility to route the compressed air from that location to the equipment. Utility drawing should only contain compressed air on the columns of the building closest to the consumption points.

©Copyright 2024 Tesla, Inc. All rights reserved. Proprietary and confidential business information subject to and disclosed under applicable Non-disclosure Agreement and/or exempt from FOIA disclosure

3 Process Overview

3.1 Commodity List

The Glazing Auto-Decking Robots for Backlite (BL), Roof Glass (RG) and Windshield (WS) at Model Y Assembly line Project will be sectioned into commodities to allow for a detailed proposal and quoting process. These terms should be used in all bids and throughout the timeline of the project.

It shall be the responsibility of the Line Integrator to integrate into the layout - should be accounted for by the Line Integrator during layout approvals.

Images and part numbers for each area of the primary model Glazing Auto-Decking Robots for Backlite (BL), Roof Glass (RG) and Windshield (WS) at Model Y Assembly line, are shown below. Refer to “02. Product CAD” folder for 3D model of product and packaging concept.

Module	Part Number & Part Name	Picture

©Copyright 2024 Tesla, Inc. All rights reserved. Proprietary and confidential business information subject to and disclosed under applicable Non-disclosure Agreement and/or exempt from FOIA disclosure

GLAZING FLOW CHART

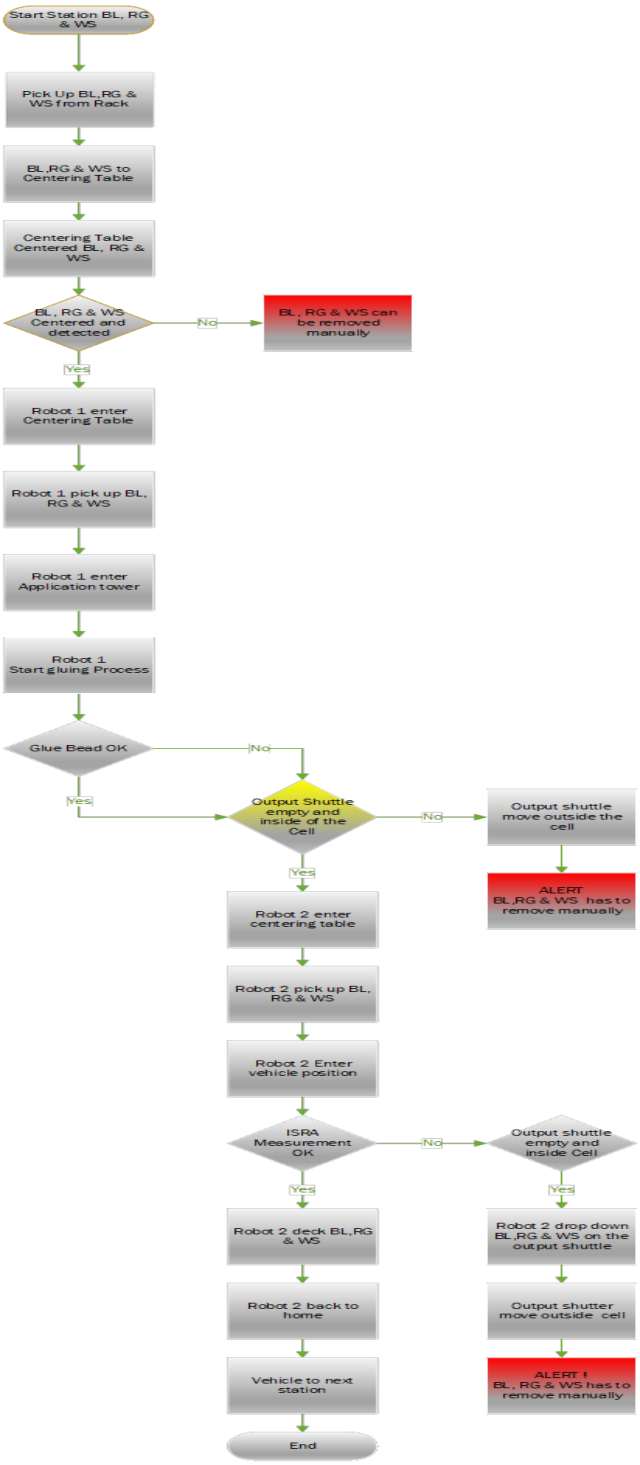

©Copyright 2024 Tesla, Inc. All rights reserved. Proprietary and confidential business information subject to and disclosed under applicable Non-disclosure Agreement and/or exempt from FOIA disclosure

3.2 Overall requirements applied to all commodities.

1) The overall goal of this production line is to deliver Glazing Auto-Decking Robots for Backlite (BL), Roof Glass (RG) and Windshield (WS) at Model Y Assembly line that can achieve 45 second takt time.
2) The entire line will be installed on the first of the GA 4.5 and GA4 - Fremont. The line builder should consider the Vibration that comes with any sensitive equipment located in elevated floor levels. All Optic based processes (Laser/Measurement) & Machining need to have dampening equipment included for stabilization. All equipment with high precision requirements will also require a dampening mechanism in their support legs that would alleviate the vibrations from the thin factory slab or material flow equipment moving adjacent to the manufacturing line.
3) Line Integrator needs to break down cost by material, fabrication, mechanical engineering design, electrical engineering design, robot program design, PLC/HMI design, mechanical installation, electrical installation, mechanical commissioning, robot commissioning, PLC/HMI commissioning for each station in each commodity. Cost breakdown of electrical cabinets fabricated by supplier must include the cost of individual BOM items.
4) Line Integrator needs to provide the detailed working schedule and justify the manpower and length of working hours (mechanical engineering design, electrical engineering design, robot program design, PLC/HMI design, mechanical installation, electrical installation, mechanical commissioning, robot commissioning, PLC/HMI commissioning for each station) for each commodity to meeting the timeline quoted.
5) Line Integrator should be able to add second shift **within 7 days** as a backup if there is any risk of not meeting the schedule, upon Tesla request.
6) Line Integrator will arrange and coordinate equipment/tooling/material delivery to Giga Factory's building floors and to the designated area for installation or storage. Vendor is responsible to plan for minimum installation equipment during the day to be delivered inside the building in case the lay down area is further away from the installation zone and there are multiple activities happening in the same space.
7) Clearance to overhead beams varies in every section of the building. Vendor should review the factory BIM model for more details on clear heights in each area. Vendor is responsible to detect the clash between the design equipment and existing MEP through the factory. Vendor will provide comments and feedback on clash detection issues which will have to be reviewed as a case-by-case bases with the factory. In case the cost for rerouting MEP is very high, it is expected from the vendor to propose alternate options to resolve the clash issue.
8) Column pitch should be designed for 6.488m by 8m. In case of additional columns required, the location of columns should be coordinated between the factory team and all other stakeholders to avoid any interference with process or material flow.
9) Overhead conveyance of any sort will have to be floor mounted on 2M due to the building constraints. For hanging from 2M or 2F the load calculation needs to be provided to account for any reinforcement required. Any type of reinforcements needed on floor level or

©Copyright 2024 Tesla, Inc. All rights reserved. Proprietary and confidential business information subject to and disclosed under applicable Non-disclosure Agreement and/or exempt from FOIA disclosure

overhead must be clearly specified in the proposal with necessary load calculations and verification, with Tesla's discretion.

10) Line Integrators need to provide details of their subcontractors for engineering, installation, and commissioning before layout approval milestone.
11) The layout should include space for at least two racks for every part loaded.
12) Operator stations should not be located below any overhead automation. (Example: Take in/out stations directly under an APC Load/unload)
13) All Mobile equipment (pallet, skillet, carrier, etc.) should have an identification system applied by means of RFID tag. This should be placed on the tools and a reader on the line side to communicate Tool Identity. For a skid roller bed conveyance used for the main line each station (stop position) should have an RFID reader for tracking the movement of skids through the loop.
14) Buffers should be incorporated within the line and should be accounted for in the layout and design to ensure availability of the line is met. Vendor should propose buffer count based on line speeds and simulation and propose the quantities needed in the proposal. Final buffer counts will be determined by Tesla after considering the overall availability of all equipment in the line.
15) The Line Integrator should always prioritize volumetric efficiency where applicable and apply that to the line design.
16) All Sealer Applications should have ability to be visually checked from an operator station in case of a fault. If this is not possible, the line builder is responsible for installing a CCTV (Camera + Monitor) to allow for this inspection. Refer to **TS-0020653 Electrical Installation Benchmarking** for requirements.
17) Any manual operator stations should be attempted to be batched together with no automation between manual stations. All manual stations shall be conveyed in a continuous moving line that is under the Safe Speed of 250mm/s. Lift assist and operator tooling should be equipped with a bridge rail that can run continuously through the length of the pitch with appropriate safety rated limit switches for tracking the movement of the tool.
18) All PFMEA's need to be completed before 'Layout Freeze' and reviewed with Tesla for approval. Risk assessment should also be done during PFMEA with the safety engineers to evaluate the risks incorporated with the equipment in the safety layout.
19) ALL devices must be depicted in the layout, including all network switches, I/O modules, PSUs, etc. All modules/switches must be free to access (not blocked) for ease of maintenance. PSUs should be height accessible on Service poles and automation/transfer areas for faster maintenance.
20) All bolt feeders shall be accessible outside of the automation cells and without the need to carry a box of bolts up any stairs or platforms.
21) All bolt feeders should have a spare quick connect blow feed hose to reduce any downtime caused by the bolt feeding operation.
22) The pick nests shouldn't be spring loaded, they should be activated and deactivated pneumatically to prevent picking error.
23) Part presence sensors should also be added to the nut runners.

©Copyright 2024 Tesla, Inc. All rights reserved. Proprietary and confidential business information subject to and disclosed under applicable Non-disclosure Agreement and/or exempt from FOIA disclosure

24) If more capacity is needed a roller system can be added to refill the drum.

25) Vendor should and can propose any automation and equipment where it minimizes the need for direct operational headcount. Vendor should provide the cost of these proposed alternatives as options and not include these in the main quotation and schedule.

3.3 Product Requirement and Variants

There are 2 Backlite variants of the product that we will be built. In this production line, units must be capable of being produced in any volume combination, order, or model mix ratio without any constraints. Below are some of the product specifications for the 2 variants. The 2 variants must be built on the same production line.

Backlite/Roof Glass Variant:

Line	Entry Mass (kg)	Exit Mass (kg)	Length (mm)	Width (mm)	Height (mm)
BL E41					
BL Opal					
RG E41					
RG Opal					

Image for the part with Dimensions shown

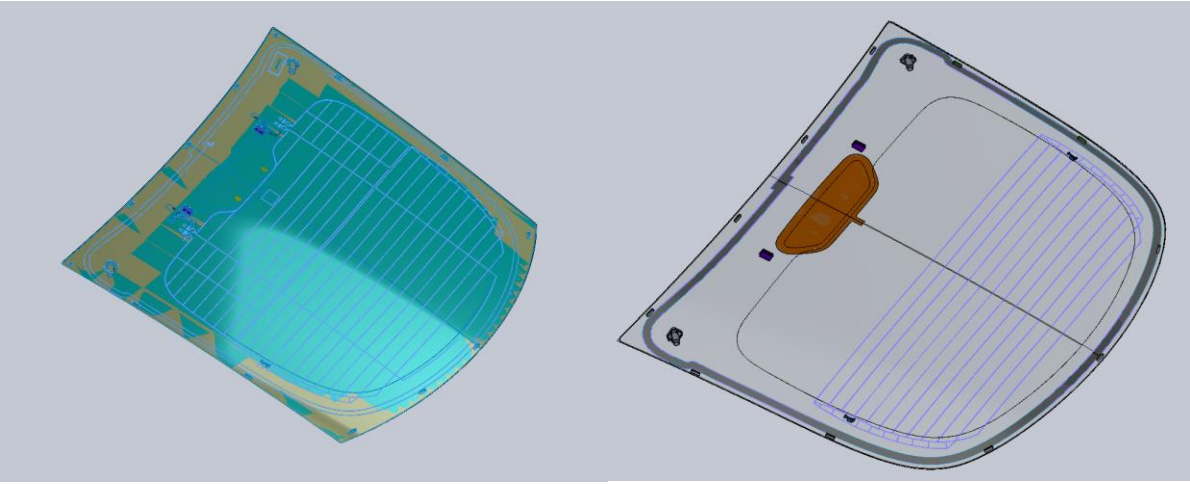

©Copyright 2024 Tesla, Inc. All rights reserved. Proprietary and confidential business information subject to and disclosed under applicable Non-disclosure Agreement and/or exempt from FOIA disclosure

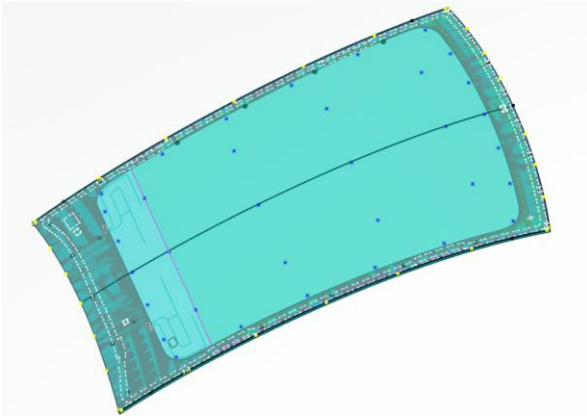

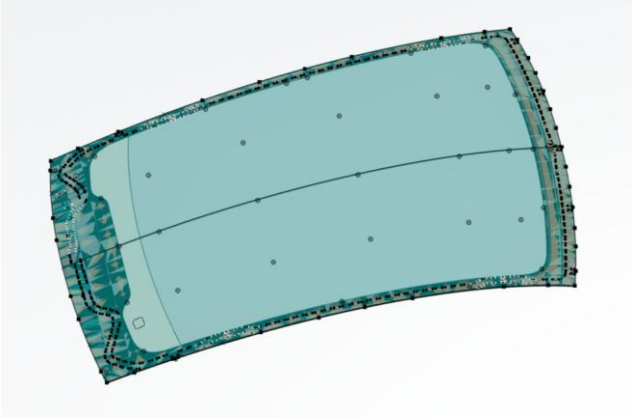

3.4 Design Requirements for Steel Structure

1) All steel structures and anchoring shall be designed to meet the requirements of all applicable Codes and Standards. The structural inputs needed from the vendor to design the factory building are due to Tesla at the beginning of the project. Please follow Tesla Standard document ***TS-0031799*** for providing the structural inputs and pit details after design kick-off. There are no Seismic requirements in Giga Factory – Fremont.
2) Vendor is responsible for the detailed engineering/design, fabrication and installation of structural platform systems that are detailed herein. All drawings and structural calculations shall be reviewed, stamped, and signed by a registered Professional Engineer licensed in the State of Texas for platforms that are used as process areas with a height of 4 feet or more. It is the vendor's responsibility to get stamped drawings and calculations and hire a third-party company to perform special inspection for anchoring during installation. Other structures that are used for conveyance or maintenance platforms do not need this requirement.
3) Line vendor should provide a load map of live and dead loads distributed in each bay with respect to factory column grid lines in different levels of the building per ***TS-0031799***.
4) Design loads for structures and foundations will comply with all applicable Codes and Standards
5) Dead loads will include, but are not limited to, the weights of platform structure and all equipment of a permanent or semi-permanent nature including tanks, bins, wall panels, partitions, flooring, drains, piping, cable trays, bus ducts, and the contents of tanks and bins measured at full operating capacity.
6) The live loads used in the design of platform structures shall be the maximum loads expected by the intended use but shall in no case be less than the minimum concentrated and uniformly distributed unit loads required by this section. Live load shall not be reduced in structural design.
7) Platform structural members and surface shall be capable of withstanding a single concentrated load of 2,000 pounds at any point on the stair without permanent deformation; 300 pounds load on an area of 4 square inches; or the following minimum uniform live loads applied in a downward direction to all surfaces:
   a) Maintenance Catwalks: 40 pounds per square foot
   b) Occupied Platforms: 60 pounds per square foot
   c) Stair and Egress: 100 pounds per square foot

©Copyright 2024 Tesla, Inc. All rights reserved. Proprietary and confidential business information subject to and disclosed under applicable Non-disclosure Agreement and/or exempt from FOIA disclosure

8) Platform structural members, walkway, crossover, or landing platform shall also be designed to withstand all required design loads in accordance with the required project specifications and drawings, and Vendor's additional loading requirements.
9) Equipment live loads shall be calculated loads based upon the actual weight and size of the equipment and parts to be placed on floors during dismantling and maintenance or to be temporarily placed on or moved over floors during installation.
10) Platform guard/handrail shall be designed for either a uniform horizontal force of 50 pounds per linear foot (plf) applied simultaneously with a 100 plf uniform vertical live load, or a 200-pound concentrated load applied at any point and in any direction, whichever governs.
11) Ideally all metal structures shall be bolted together for ease of assembly and disassembly.
12) Building **Expansion joints** should be designed in platforms and equipment in the same location as the building to account for seasonal displacements in both building and equipment.
13) In addition, please refer to the following documents:
    a. SPEC_GF_05 51 36 – Structural Steel Platforms
    b. SPEC_GF_41 31 05 – Equipment Anchorage
    c. SPEC_GF_41 31 06 – Non-Building Structures
    d. GFTX Gen Assembly Scope Delineation
    e. Fremont Factory Utilities Specifications
    f. How To Complete Facility Design EQM For PDPs

3.5 Design Requirements for Mainline Conveyance

In this section provide detailed description of the layout, section views, any requirement for geo pallets, carriers, pin details, 2way 4way requirements, calibration jig features, chassis marriage requirements, framing details, platform plan view for manual stations, automation cell details, transfer zone and handshaking locations and scope and responsibilities of that area, design requirements for any sub-assemblies and line side assembly tables, …

3.6 Design Requirements for Take-out/In Strategy

1) All take in/out stations should have an "no door" strategy (even if it is a manual backup station). The station should follow the same safety concepts as a normal, every cycle, operator station. This includes Light curtains, Area Scanners, Fencing, etc.
2) There must be part presence sensors in the station to know if the cart is full or empty.
3) All Take in/out stations should have a Barcode reader, Tangent, service pole & HMI in the station to validate the quality standing of the parts (non-conformities). The Barcode Reader should not impact overall cycle time.
4) Takeout stations should be designed with the following strategy in mind:
    a. Preference A: Pull out carts
    b. Preference B: Takeout Fixture + Lift Assist
    c. Preference C: Drawer + Lift Assist
5) Take in/out station must be able to be operated within the design cycle time. If this is used as a manual backup for automation, or used during commissioning, the rate should be communicated to Tesla for approval.

©Copyright 2024 Tesla, Inc. All rights reserved. Proprietary and confidential business information subject to and disclosed under applicable Non-disclosure Agreement and/or exempt from FOIA disclosure

6) Carts must have the part positioned in the ergonomic zone for operators as defined in our standard. Wheel noise must be below 80 decibels when pulled by a tugger to meet OSHA. Carts must meet the OSHA requirement for push/pull limits when manually transporting the cart.

3.7 Design Requirements for Material Lineside Presentation

1) It is within the scope of the Line integrator to provide lineside material equipment that works within their allocated space for automation cells. For manual stations, the lineside space should be provided based on operator ergo height and tooling compatibility.
2) Ideally, the Line integrator shall utilize lineside and vertical space to hold up to 3 material dollies/dunnage/racks for each part variety in station.
3) All material dunnage/dollies/rack shall be accessible outside of a Monitor Power Safety zone for a material handling associate without a forklift or power jack.
4) Any part flow within this scope of work will be the Line integrator's responsibility to design, fabricate, program, and install.
5) Part dunnage/dollies/racks packaging dimensions as well as 3D CAD will be supplied by the Tesla Engineer when available. See folder "02. Product CAD" for preliminary concept packaging. It is expected for the Line integrator to provide feedback or propose alternate packaging method that best suits their automation application.
6) Automation that will pick directly out of the packaging will be the Line integrator's responsibility and up to the Line integrator how they wish to proceed.
7) Dollies and packaging requirements will fall on Tesla's Packaging team, and they will take inputs from the vendor on how the part will be presented to the automation but ultimately Tesla Packaging team will have the last say on dollies and packaging design and fabrication.

3.8 Design Requirements for Manual Hoists/Lift Assists

1) The line builder must incorporate a lift assist for any manual movement of parts if the part dimensions and weight exceed the limits set by ***TS-0011963*** Safety Specification for Equipment and NA Ergonomic Target Guidelines.
2) Any lift assist equipment that is added to the assembly should be safety rated and should involve safety rated components during construction of the unit.
3) Lift Assist should always be returned to "home position" after the process is completed. Safety risk assessment is necessary to define minimum performance level of required "home position" sensor.
4) The Lift assist will need to be bought off at vendor site proving all functions and capable to perform job extensively. It is the vendor's responsibility to ensure that the lift assist has sufficient features such as pick points, rough guides etc. to hold a part in a repeatable and steady manner during pick, manipulation, drop, and install.
5) The Lift Assist will be run through a third-party certification that vendor is responsible for project exit and final 290 buy-off.
6) The end effector should have 2 handles and not a frame for manipulation.

©Copyright 2024 Tesla, Inc. All rights reserved. Proprietary and confidential business information subject to and disclosed under applicable Non-disclosure Agreement and/or exempt from FOIA disclosure

7) All Electric Motors ("Tractors") must enable easy "decoupling" from rail so if power goes down or the motor is damaged the lift assist can still be used by manually pushing/pulling it.
8) All rails to have safety steel cables and hard stops at each end, and follow safety design specifications as expected in TS-0010782 Assembly Shop Automation Scope of Work and TS-0011963 Safety Specifications for Equipment
9) Pinch points should have covers that can be easily removed for preventative maintenance.
10) Risks and load limits clearly called out (tagged)
11) Electrical assessment to prevent the risk of electric discharge through the operator when contacting the Lift Assist, caused by damage to the power cables that feed the electric motors on the overhead.
12) Two-hands' forced operation for all actions.
13) Sensors that let the logic know if the Lift Assist is inside or outside the loading station. These must be contact-less (Inductive PX).
14) Visual indicator confirming parts held (clamped, etc.)
15) Pneumatic or electrical logic that prevents parts from being released on the air in between the rack (container) and the dropping point.
16) Any lift assist with PLC control of motion axes or cylinders will need to follow tesla software design standards and provide a system architecture and components compatible with ***TS-0031736*** Vehicle Electrical Architecture and Requirements.
17) Lift assists controlled by pneumatic systems should have a pressure regulator located on a height accessible elevation for maintenance purposes per safety regulations.
18) All pneumatic lift assists should utilize rod-lock cylinders.

3.9 Design Requirements for a Flexible Line

19) The system shall protect from a software and layout perspective, the ability to handle and process additional product variants with minimal change-over.
20) All the tooling, transfer system pallets/skids, conveyance, racks, process, manual lift assists/manipulators, and part trolleys should be designed to work with all variants/models being built on the line/station.
21) Even though batching will be the preferred mode for production, the process and the control system should be designed to have a hot switch between models.
22) The layout should consider enough space lineside to have at least 2 racks/bins/boxes of corresponding parts of each variant.
23) All part load stations should have appropriate lighting and high visibility indicators for the variant currently in production.

©Copyright 2024 Tesla, Inc. All rights reserved. Proprietary and confidential business information subject to and disclosed under applicable Non-disclosure Agreement and/or exempt from FOIA disclosure

3.10 Design Requirements for Manual Stations

1) All manual stations must have tool rail that is supported by overhead steel structure that must not interfere with any overhead conveyance, building utilities, or automation with the assembly line.
    a. Tool rail must be two EEPOS Type M on each side of each manual station with end caps at the beginning and end of each continuous section. There should be mid-stops between each station to prevent tool over travel, and safety devices provisioned as required in ***TS-0010782*** Assembly Shop Automation Scope of work and **TS-0011963** Safety specifications for equipment.

    Types of EEPOS stoppers and end caps

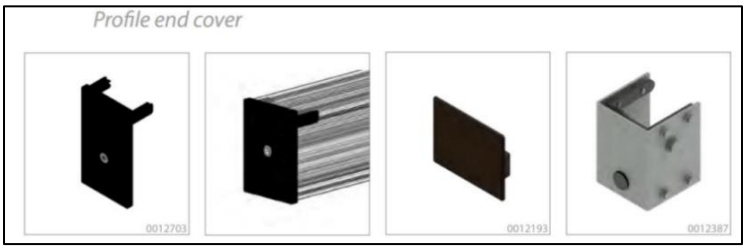

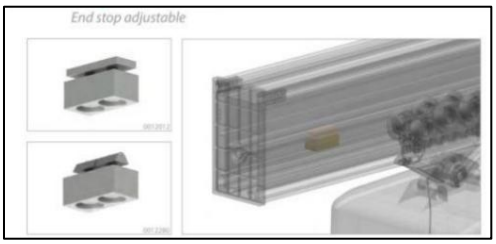

    b. All tool rail must use secondary restraint cables to prevent the rail from falling in the event of poor securing.
    c. Tool rail structure set on each side of the station should be able to support up to 550 [kg/m] based on the span designed to support the rails.
    d. All tool rails need to be levelled and ensure there are gates to introduce equipment onto the rails easily. Insertion gates for tool rail trollies should be provided on every 2 station pitches for the main line.

    Specifications for insertion gates

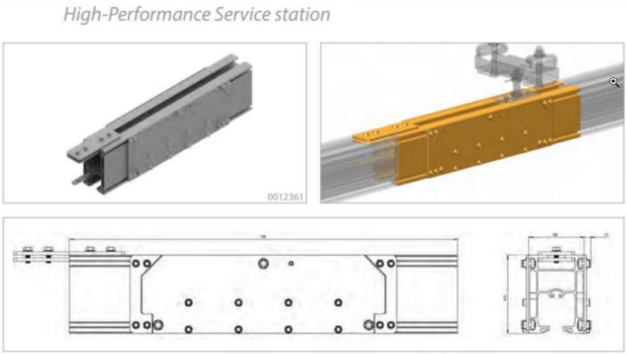

    e. Minimum height from bottom of tool rail to operator work surface floor should be 3.3 meters.

©Copyright 2024 Tesla, Inc. All rights reserved. Proprietary and confidential business information subject to and disclosed under applicable Non-disclosure Agreement and/or exempt from FOIA disclosure

2) Each manual station shall have a Starline bus bar with access to bus plug to provide 120VAC and 208VAC 20amps. Plugin boxes and plugs for 120V and 208V should be provided by the vendor. Schematics of plugin box and plug types is shown below. The step down transformer connected to the busbar infeed is provided by the vendor and connected to the MPDP of the line per **TS-0031736.**

Specifications for plugs

Colour	Amps	Type	Terminal	Voltage	Usuage	Standrard
Blue	16A	1P+N+G	Screwless	120VAC	RCBO 30ma protected outlets	UL
Red	16A	1P+N+G	Screwless	120VAC	Conveyor system IO	UL
Black	16A	1P+N+G	Screwless	120VAC	Station appliances	UL
Blue	20A	2P+G	Screwless	208VAC	High power devices	UL

Specifications for 120V plugin box

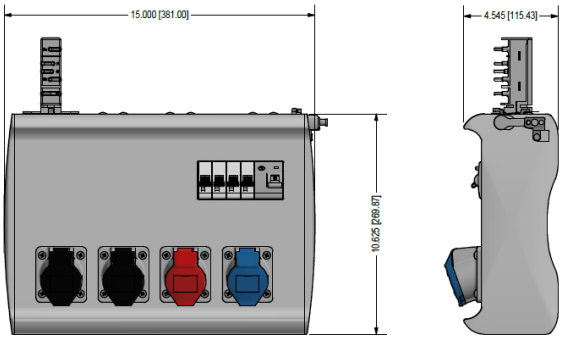

DEVICE TYPE: (4) PIN & SLEEVE SPLASH PROOF RECEPTACLES

CIRCUIT PROTECTION: (4)1P, S201M BREAKERS & (1)2P, ABB F202 RCCB

ELECTRICAL RATINGS

SYSTEM VOLTS: 208Y/120 **LOAD VOLTS:** 120

AMPERAGE: 20 **SHORT CIRCUIT:** 10 kAIC

Specifications for 208V plugin box for tool controllers

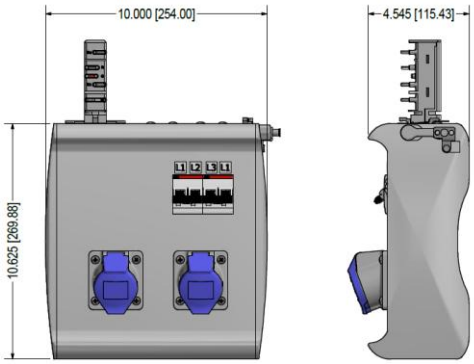

DEVICE TYPE: SPLASHPROOF PIN & SLEEVE RECEPTACLES

CIRCUIT PROTECTION: (2) 20A/2-POLE ABB SU202ML-K20 BREAKERS

ELECTRICAL RATINGS

SYSTEM VOLTS: 208Y/120 **LOAD VOLTS:** 208

AMPERAGE: 20 **SHORT CIRCUIT:** 14kAIC

3) Each station shall have a service pole that is accessible to the operator. Specifications on service pole can be found in section 6.2.2 of this document.
4) Each station shall have compressed air drops on both sides with a ½ " valve considering a header system that will be provided from the supplier.
5) Cable trays for high voltage, low voltage, and network should be provided in all process areas and automation cells. Vendor should prioritize the installation of cable trays for network and installation of service poles to unlock the work for network contractor from the factory. Vendor should provide at least two locations for line side IDF panels (provided by Tesla and size will be provided after kickoff). The vendor should consider this space in the design layout. The location needs to be close to high density of network consumption to reduce network cable length. Usually the location near manual stations with close proximity to an MCP panel will be an optimized location for the lineside IDF.

©Copyright 2024 Tesla, Inc. All rights reserved. Proprietary and confidential business information subject to and disclosed under applicable Non-disclosure Agreement and/or exempt from FOIA disclosure

6) Each service pole should contain 6 network drops for connection to tool controller, tangent, scanner, printer, vision automation, and NX-witness camera. Each manual station will have 2 service poles one on each side of the manual station. There should not be local switches or cisco switches used in manual stations since some of the components use POE. The network requirements for manual stations should be provided in the utility drawing and the EQM list.
7) Each process station and covered pits shall have task lighting that falls within the specifications of the table below:

Area	Illuminance (FC/Lux)	CCT	Comments
Paint – Inspection/Light Repair	150-300 / 1614 - 3229	4500K (min)	For Surface imperfection defects
Paint – Final Confirmation	300-500 / 3229 – 5381	5000K (min)	For color and repair defects
General Assembly Inspection	150-300 / 1614 - 3229	4800K (min)	
Pre-Delivery Inspection	150 – 300 / 1614 – 3229	4800K (min)	
General Assembly Process	>70 / >750	4000K (min)	In-direct line of sight, minimal shadows and no glares

An Example of the manual station tool rail structure requirements is shown in the image below. The conveyor chosen for this image is heavy EMS carrier, but the overall concept applies to any manual process station.

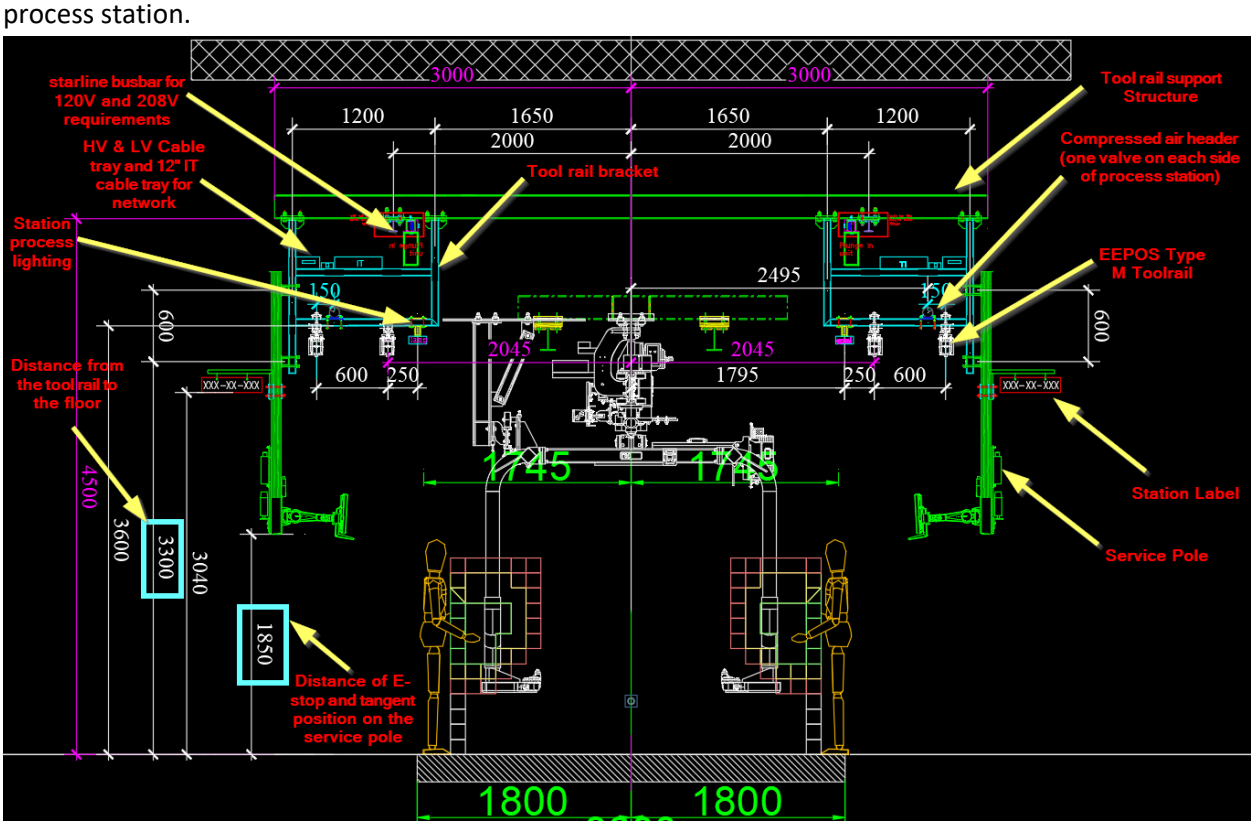

©Copyright 2024 Tesla, Inc. All rights reserved. Proprietary and confidential business information subject to and disclosed under applicable Non-disclosure Agreement and/or exempt from FOIA disclosure

3.11 Design Requirements for a Module Line Design

Part of this product roadmap is to continue to innovate traditional manufacturing strategies to improve design lead time, decrease onsite installation, and streamline change processes. Tesla wishes to have an assembly line that could be modified, expanded, or changed with little construction costs. To keep ahead of the competition Tesla strives for continuous design changes to all products and must have an assembly line that can accommodate.

1) Design of station or group of automation shall be module and able to be easily moved or exchanged in sequence position of assembly line during design.
2) All stations shall be designed with a standard length for all utilities for conveyor lengths, bus bar plugs ins, air pipe sections, network connections, lighting, tool rail, and any other utilities required for standard operating.
3) Each module area shall have its own mechanical and electrical infrastructure that can run standalone.
4) Power disruption shall be provided using a high-power bus bar current where each station are able to plug in directly to the bus bar for power. This applies for 480VAC 3 phase, 110VAC 3 phase.
5) All bus bar is included in scope of Line integrator. Tesla will provide 1 power drop to Line integrator's PDP panel.
6) Ideally network connections to the main conveyor MCP shall be installed at standard intervals in the upper structure of the line only requiring module connections and robots to be installed. Allowing disconnection or separation of position in the line.
7) Air shall be provided from sectional air module systems.
8) Ideally all metal structures shall be bolted together for ease of assembly and disassembly.

3.12 Design Requirements for Maintenance

1) Safety logic and hardware shall allow a maintenance technician to access and replace a fixture safely.
2) Supplier shall provide tools and accommodations for ease of maintenance of the system (ladders, platforms, etc)

©Copyright 2024 Tesla, Inc. All rights reserved. Proprietary and confidential business information subject to and disclosed under applicable Non-disclosure Agreement and/or exempt from FOIA disclosure

4 Line Design

4.1 Capacity

4.1.1 Rate

The capacity of each line is defined as the minimum rate in 75 **net jobs per hour**, and this is the contractual obligation. Guideline cycle times are also provided. Deviations from the guideline cycle times shall be reviewed with Tesla prior to design buy-off to ensure upstream lines always have a lower cycle time than downstream lines.

The Production line ramp will be implemented to achieve the following.

4.1.1.1 Ramp to Production Ready:

1) All cycle time calculations shall utilize Tesla's standard element times for the machine portion of the cycle time consideration detailed in **TS-0010560** unless otherwise approved by Tesla.
2) All cycle time calculations shall be calculated using the body line element times **TS-0010560**. All tip dressing calculations shall be accounted for using the standard mentioned above.
3) A full discrete event simulation (DES) is required from the Line Integrator to confirm the cycle time and availability in each area results in the minimum rate specified above as detailed in **TS-0004826**.

4.1.2 Robot Utilization

1) The process shall be designed in a way to meet the rate targets with robot utilization of 85%.
2) In cases where robot utilization is less than 85%, Line Integrators shall consider adding additional joining to the robot from upstream or downstream processes where possible to rebalance the process.
3) Processes that include robots with utilization above 90% or below 80% shall be reviewed with Tesla prior to design buy-off.

4.1.3 Operator Utilization

1) The process shall be designed in a way to meet the rate targets with a maximum operator utilization of 90% and a minimum of 80%.
2) Any deviations from the above-mentioned standards shall be reviewed with Tesla prior to design buy-off.

4.2 Quality

1) The required dimensional accuracy of each product/Commodity is 90% of points in specified tolerance by Milestone 360. Tesla is responsible for the Quality builds and for hitting this target. Tesla requires the Line Builder to plan for the line availability for these builds and to supply the necessary resources to facilitate the build (example: Operators, PLC, Robotic Support). For more details, reference **TS-0004835**.

©Copyright 2024 Tesla, Inc. All rights reserved. Proprietary and confidential business information subject to and disclosed under applicable Non-disclosure Agreement and/or exempt from FOIA disclosure

2) Every Fixture must be certified, in accordance with **TS-0004844**, by the line builder. The line builder must supply their own measurement equipment and operator. It is a requirement that 100% of the fixtures are measured within the line, with 100% of the features being measured on each tool, with all features being 100% within tolerance after installing onsite. A Tesla Engineer must buy off on all measurement reports before Power-On (220 milestone).
3) Every Geo Fixture must undergo a Repeatability Study by the line builder. The line builder must supply their own measurement equipment and operator. It is a requirement that the repeatability study yields a Cp/Cpk of 1.67 or greater to ensure the tooling is robust and not contributing to part variation. A Tesla Engineer must buy off on all measurement reports before 290 buyoffs.
4) Every fixture, tool, and equipment must prevent mutilation on parts and assemblies. Line integrator is responsible to solve any fixture, tooling, and equipment induced mutilation before Milestone 360.
5) Integrator to provide Gage Repeatability & Reproducibility for all fixtures and gages along with a Measurement System Analysis as per **BMS-0000021**, **TS-0003413**, **TS-0003544**, and **TS-0003552** before Milestone 360.
6) Reporting of torque traces must adhere to **TM-7910** (Fastener Specification: Threaded Joint Validation and Testing), integrator is responsible for ensuring torque traces, final torque, and final angle data are able to be recorded into Tesla databases/quality systems (FX & Toolsnet or similar).
7) All structural members and anchors should be torque marked clearly and should be visible from floor level to ensure all the bolts/anchors for equipment are fastened.
8) FEA must be done and provided on all carriers/jigs/fixtures/tooling to ensure design correct safety factors are accounted for to prevent deflection, deformation, and CG issues. FEA must prove less than 0.1 mm total deflection and/or movement.

4.3 Process Flow

The Glazing Auto-Decking Robots for Backlite (BL), Roof Glass (RG) and Windshield (WS) at Model Y Assembly line. Program process flow documents are included with this RFQ. Refer to '04. Process Flow' folder for the proposed sequence.

1. Line Integrators may suggest deviations from this process flow if sound technical justifications can be established in each case. This deviation must be agreed to by the responsible Tesla Engineer prior to design buy-off.

The Glazing Auto-Decking Robots for Backlite (BL), Roof Glass (RG) and Windshield (WS) at Model Y Assembly line. Manufacturing Equipment Process Sequence document is subject to change and prior to any design review, the latest Process Sequence document that will be shared by the Tesla Engineer should be used for reference.

2. Where there are conflicts in information between the process flow document and the 3D CAD data, the 3D CAD data shall be considered the master.

©Copyright 2024 Tesla, Inc. All rights reserved. Proprietary and confidential business information subject to and disclosed under applicable Non-disclosure Agreement and/or exempt from FOIA disclosure

3. Please note that there are some/will be deviations to the process flow documents based on design changes realized after these documents were created. These deviations will be communicated to the Line Integrator during the quoting/Design process.

©Copyright 2024 Tesla, Inc. All rights reserved. Proprietary and confidential business information subject to and disclosed under applicable Non-disclosure Agreement and/or exempt from FOIA disclosure

4.3.1 Subprocess

©Copyright 2024 Tesla, Inc. All rights reserved. Proprietary and confidential business information subject to and disclosed under applicable Non-disclosure Agreement and/or exempt from FOIA disclosure

4.4 Product and Process Data Exchange

1) Any Product or Process data that will be exchanged between Tesla and Line integrators will need to be treated with complete security and confidentiality. Please refer to the NDA agreement for terms and conditions on exchange.
2) To effectively manage product and process changes, data will be exchanged, two-way between Tesla and the Line Integrator on a regular basis using 'SharePoint' web-based file sharing. External JIRA will be used for issue tracking. Jira issues related to each milestone should be fully resolved to ensure the completion of the milestone.
3) All product, infrastructure and fixture data shall be delivered to Tesla in CATIA or 3DXML format during design review. But in the end of the project, at final design stage, Line Integrator should deliver all tooling and fixtures as a part of their deliverables in the required format(s) stated in Section 8.3.

4.5 EHS Requirements

EHS Principles and Objectives

We value and protect people, planet, property, and products by maintaining a safe, healthy, secure, and environmentally conscious workplace without compromise for production or profit. Prework risk assessments must be completed and turned into Tesla EHS for review. Vendors are required to follow Tesla Environmental, Health, Safety and Security procedures:
Global Contractor Environment, Health, Safety, and Security (EHS&S) Management - Document Code GLO-ALL-CON-STA-2-146
North America Contractor Environment, Health and Safety Management - Document Code NA-ALL CON-PRO-2-152
Vendors are required to have a Safety Rep present and onsite in all projects. The Safety Rep will be responsible for enforcing and monitoring contractor safety in accordance with Tesla Environmental, Health, Safety and Security procedures, OSHA, and ISO standards.

Ergonomic Targets

1) Refer to ***TS-0021733***, NA & GER –Template Ergonomic Design Target Master Bundle, for ergonomic targets for common manual activities. The targets shall be always adhered to, and no exceptions shall be granted for ergonomic requirements. It is the Vendor's responsibility to ensure that all manual workstation and work content is reviewed early in the concept and design phase such that a Tesla representative(s) can approve the proposal with time to request changes if necessary.
2) Work content shall be 1070mm above the operator standing surface where possible. Conveyor height design should account for the effects of additional pallets and fixtures on the actual work content heights.
3) The Vendor shall supply any platforms/tooling required to allow operators to perform their work within ergonomic standards.

©Copyright 2024 Tesla, Inc. All rights reserved. Proprietary and confidential business information subject to and disclosed under applicable Non-disclosure Agreement and/or exempt from FOIA disclosure

Machine Functional Safety

1) The vendor will be responsible for designing the equipment to pass 250, 270 and 290 buy off requirements as discussed in List of Reference Documents Risk Assessment:
2) The Vendor must conduct a safety risk assessment using the Tesla standard template, ***TS-0010617***, which can be found in the List of Reference Documents.
3) The Risk Assessment shall then be reviewed and approved by Tesla EHS and Tesla Engineering team.
4) Fastening tools need to be guarded in a way to protect against operator exposure to rotational components, as well as electrically isolated and/or insulated.
5) All machinery shall comply with international and local safety standards. All machinery shall comply with Tesla standards, unless contradictory to international and local safety standards. Core guidance is given in ***TS-0011963***

Chemical Risk and Process Safety Management

1) All chemical risk, process safety, and worker exposure controls shall comply with national, local, and internal Tesla requirements.
2) Process, instruments, tools and components shall meet industry, national, local and consensus standards. These standards shall be disclosed to the industrial hygiene and process safety design representatives.
3) Chemicals to be used in each process must be accompanied by a Safety Data Sheet (SDS) that is compliant with the local jurisdiction, chemical properties, and characteristics, expected volume or mass daily use rate, and expected storage amount. These chemicals will be reviewed by Tesla Industrial Hygiene and Process Safety. Each chemical shall have a Tesla Part Number prior to implementation or use within a system.
4) All processes that contain or produce toxic, reactive, flammable, or explosive chemicals or combustible dust hazards must adhere to Tesla and industry standards. Tesla and vendor shall perform a process safety risk assessment utilizing methodology deemed acceptable based on the process or equipment by the Tesla safety employee.
5) Chemical process safety hazards must be identified and managed in accordance with, but not limited to, ***TS-0022769*** Chemical Process Hazard and Risk Assessment Guidance, NFPA 33 (Standard for Spray Application Using Flammable or Combustible Materials), and local and international building and fire code requirements.
6) Vendor to provide Dust Hazard Analysis assessment for all expected solids/particulates (powders and generated materials) that shall meet NFPA 652 Chapter 7. Tesla shall be included throughout the Dust Hazard Analysis process for review and approval. Vendor shall design and provide drawings for electrically classified areas as required by NFPA/NEC. Vendor to include dust collection system as part of design.

©Copyright 2024 Tesla, Inc. All rights reserved. Proprietary and confidential business information subject to and disclosed under applicable Non-disclosure Agreement and/or exempt from FOIA disclosure

7) Any electrical installation within the process must meet the hazardous electrical area requirements as recommended in NFPA 33 and NEC 70.
8) Potential fire and explosion hazards associated with the process must be managed in accordance with, but not limited to, NFPA 33, NEC 70, NFPA: 652, 654, 69, 68, 484.
9) Chemical controls and mitigation shall meet Tesla industrial hygiene and process safety standards. These standards meet or exceed national and local regulatory requirements, and consensus standards.
10) Laser and radiation emitting tools and instruments shall meet national, local, and consensus standards. The tools shall be constructed to meet As Low As Reasonably Achievable (ALARA) principles, and shall be constructed to operate per national and local standards. Relevant documents and standards: ANZI Z136 Guidelines for Implementing a Safe Laser Program US Nuclear Regulatory Commission: Part 20 – Standards for Protection Against Radiation.
11) Any deviations or adjustments to the above requirements shall be reviewed and approved by the Tesla Industrial Hygiene and Process Safety representatives.

Environmental

1) Based upon the SDS chemical review by Tesla EHS, affected processes may require adequate chemical containment / ventilation hoods so that it can be compatible with facility abatement system(s) (This is pending chemical material selection, but may apply to adhesive, potting, and/or RTV materials).
2) All chemicals in use or storage require secondary containment.
3) Any hazardous waste generated from the process needs a means for the operators to remove from the equipment at least once per shift (example; removal of purged material or access potting material).

©Copyright 2024 Tesla, Inc. All rights reserved. Proprietary and confidential business information subject to and disclosed under applicable Non-disclosure Agreement and/or exempt from FOIA disclosure

5 Conceptual Layout

The section will mention all layout requirements based on concept and process flow. Refer to folder "03. Layout" for footprint allocation and point-of-consumption of the subassembly.

1) The Line Integrator will be responsible for all layout modifications from original and needs to be an accurate representation of the final production line, including all equipment, tooling, piping, electrical devices, racks, etc. Every device shall follow Tesla's naming convention mentioned in **TS-0010569** and **TS-0033995.**
2) Where there are cases of scope transitions with tool vendors or line integrator vendors owning a separate scope, it is the responsibility of the line integrator owning this scope of work to make sure that the scope transition is as seamless as possible and that every reasonable effort is made to resolve any interface constraints that may arise during the project.
3) Line Integrator must perform site visit assessment and inspection during design phase to confirm all existing building and utility obstructions are identified and considered in layout, equipment, conveyors, and platform designs.
4) It is the Line Integrator's responsibility to provide all information and occupancy of the line to Tesla to be considered in building structure and utility supply design as early as concept design phase of the project.
5) In the RFQ package, Block layouts will be provided based on the process flow and space requirements furnished by the Tesla Engineer. Refer to folder "03. Layout" for footprint allocation and point-of-consumption of the subassembly.
6) The layout provided by Tesla is the maximum space that can be allowed for the integrator to create a layout. The expectation from the line integrator is that all new equipment or modifications fit into the overall layout envelope (This includes all planned incoming part racks and outgoing WIP racks). Any deviations of this nature are to be bought off by the respective Tesla Engineer during the design phase. In case of needing additional buffer for empty/loaded carts/carriers the vendor should propose options to consider additional length in the footprint to cover those quantities. Vendor should inform Tesla engineers if there are any additional buffer requirements needed (per simulation) that are not included in conceptual layout.
7) The Line Integrator shall provide the utility matrix per the format attached in the package with all drops and requirements needed. This matrix will be treated as master for all drops and tie-in points from Tesla for Compressed air, power, and process cooling water.
8) Along with the 2D layout, Tesla will provide a 3D Navisworks BIM model containing the clear heights and existing MEP in the area. Vendor is responsible to detect any clash with utilities and let Tesla engineers know. Vendor should consider some modifications in the concept layout if there is a serious clash with critical utilities that will have a high cost for modification.

©Copyright 2024 Tesla, Inc. All rights reserved. Proprietary and confidential business information subject to and disclosed under applicable Non-disclosure Agreement and/or exempt from FOIA disclosure

6 Equipment and Installation Overview

6.1 Equipment Supply List

Vendor to use this table as an overall guideline for quotation purposes in their proposal.

Equipment Description	Quantity	Additional Information
Conveyor (Quantity of carriers/skids/pallets)	__0_	This is given just for quotation purposes (vendor should define the actual quantity in proposal but should quote on the quantity mentioned here)
Tote stacker / de-stackers	Defined in Vendor proposal	Subject to change during Technical Design.
Robots / Gantries	Defined in Vendor proposal	Based on proposed design from Line Integrator
EoAT for automated assembly	Defined in Vendor proposal	Line Integrator to supply. Subject to change during technical design
Inductive/Busbar power systems for conveyance	Defined in Vendor proposal	
HMI Panels	Defined in Vendor proposal	Minimum 2 for each OP Mode
PDP panels	Defined in Vendor proposal	Subject to change
MCP panels	Defined in Vendor proposal	Subject to change
Low level lighting panel	Defined in Vendor proposal	120VAC
Electric main supply 120V/208V Bus bar including bus plug-in unit and plugs	Defined in Vendor proposal	Each manual station will require one 120V plugin box on each side. 208V plugin boxes will depend on quantity of the reaction arms in the line.
Compressed Air header supply and ½” valves	Defined in Vendor proposal	Each manual station will have two ½” valves. Centering devices and other pneumatic systems would add more to this quantity

©Copyright 2024 Tesla, Inc. All rights reserved. Proprietary and confidential business information subject to and disclosed under applicable Non-disclosure Agreement and/or exempt from FOIA disclosure

480V plugs for manual multi spindles or other tools in the line	Defined in Vendor proposal	Line Integrator to supply.
Ergo platforms for Operator Stations	Defined in Vendor proposal	An initial assumption for 40% of the manual stations should be considered in case there is not enough info one the process during bidding time.
Tangent Arm and Tangent install on service pole	Defined in Vendor proposal	Vendor will have to install the tangent and tangent arms on the service pole (Tesla will provide the arms and the tangents for the manual stations)
Assembly line 3D BIM Navis works model, required for clash detection	Defined in Vendor proposal	Reference should be similar to Tesla provided BIM Model

Note: This equipment list is a non-exhaustive, high-level equipment supply to simply state major equipment expectations.

6.2 Tesla or Line Integrator Provided Equipment

This section defines Tesla's scope of supply for equipment and items if applicable.

1) **It is to be noted that any equipment or item not explicitly described in this section will not be included in Tesla's scope of supply.**
2) The equipment or items that the Line Integrator decides are required for project execution but are not shown in this section shall be procured by the Line Integrator and the associated costs shall be included in the proposal. This proposal will need to be bought off by a Tesla Engineer during the design phase.
3) Due to long lead items of major components, the line integrator can propose alternate solutions that can be used to meet timeline. This proposal will require approval from Tesla to go ahead.
4) **The Line integrator must order all long lead items in a timely manner that can solve the timeline taking into consideration the global supply chain delays in the current scenario. The line builder must present a preliminary long leads list at final proposal to de-risk the timeline. At the final proposal submission, Line Integrators should present the long leads item list to Tesla and identify what they consider a risk to the overall schedule. With approval from Tesla, the Line integrator can go ahead and purchase those items to ensure timelines of the project are met and risks are mitigated.**
5) The line integrator must also include commissioning spares for all critical or long lead items.

©Copyright 2024 Tesla, Inc. All rights reserved. Proprietary and confidential business information subject to and disclosed under applicable Non-disclosure Agreement and/or exempt from FOIA disclosure

6) Line Integrator is required to specify and provide equipment and/or components from Tesla's line component catalogs (**TS-0003248** Approved Component List). All deviations and additions to the catalogs will require approval from Tesla.
7) When one or more equipment or items fall into Tesla's scope of supply, Line Integrator shall indicate their requirement by including them detailed in the cost breakdown, with note "Tesla supply" and cost marked as "0".
8) The Line Integrator is responsible for installing and commissioning all equipment purchased by Tesla. The Line Integrator will have to coordinate with Tesla engineers to ensure all accessories and equipment required for functioning of the line are accounted for.
9) Line integrator shall protect space for line-side maintenance PC(s) and provide network and power provisions nearby. Quantity of PCs must be reviewed and finalized during initial controls concept reviews with Tesla controls engineers. PC will be supplied by Tesla.

6.2.1 Industrial Robot

If required:

1) Line Integrator is responsible for specifying robot reach and payload, therefore dictating the model. Tesla will then order robots & communication of cabinet types. Tesla can dictate robot brand to the line builder at any time. Robots will only be accepted at 90% payload utilization or less.
2) Vision hardware will be determined by the process being carried out & will be procured by the line integrator. Below is a table of preferred vision vendors, based on the robot process. Tesla is open to reviewing other solutions, but will have the final decision on what the line builder should design for:

Vision Type	Supplier	Specified by	Required Software	Camera and camera cables	Calibration grid and stand	Dress package (carried camera)	Light source*	Camera mounting tool/stand IPC enclosure	Installation, commissioning, programming
Rack pick	Mechmind	Line Integrator	Tesla	Tesla	Line Integrator	Line Integrator	N/A	Line Integrator	Line Integrator
Rack pick	iRVision	Line Integrator	Tesla	Tesla	Line Integrator	Tesla	Line Integrator	Line Integrator	Line Integrator
Bin Picking	MechMind	Line Integrator	Tesla	Tesla	Line Integrator	Line Integrator	N/A	Line Integrator	Line Integrator
Bin Picking	Keyence	Line Integrator	Line Integrator	Line Integrator	Line Integrator	Line Integrator	N/A	Line Integrator	Line Integrator
Offset 3D	Perceptron	Line Integrator	Line Integrator	Line Integrator	Line Integrator	Line Integrator	Line Integrator	Line Integrator	Line Integrator
Offset 3D	Mechmind	Line Integrator	Tesla	Tesla	Line Integrator	Line Integrator	N/A	Line Integrator	Line Integrator

©Copyright 2024 Tesla, Inc. All rights reserved. Proprietary and confidential business information subject to and disclosed under applicable Non-disclosure Agreement and/or exempt from FOIA disclosure

3) Tesla has preferred robotic suppliers of Fanuc & Kuka for this project. ABB robots are a consideration, but not guaranteed, if there is compelling reason to use them. Any deviation must have Tesla Engineer approval before Purchase Order release.
4) It is recommended that the line builder try to minimize the number of different manufacturers and models when selecting applicable robots for the line.
5) The End-of-arm tool (EoAT) for the respective robots and laser dress packages if any that are customized, shall be provided by the Line Integrator.
6) The dress packages (robot base to robot end of arm tool), robot cables (control cabinet to robot base), linear slides for the robot (if any) will be provided by Line Integrator. 24V Aux Power and Network Cables (from control cabinet to robot base) will be by Line Integrator.
7) Follow robot programming expectations outlined in **TS-0002936** Robot Specifications
8) Use **TS-0002936** Robotic Specifications for further details.

Item to be specified	Specified by:	Ordered by:	Notes
Robot Capacity & Reach Requirement	Line Integrator	Tesla	24 weeks prior to installation
Robot Cabinet Type	Tesla	Tesla	20 weeks prior to installation
Robot Technology, & Dress Package	Line Integrator	Line Integrator	24 weeks prior to installation
Robot Cabinet to Robot Cable Length	Line Integrator	Tesla	22 weeks prior to installation
Robot Base Height	Line Integrator	Line Integrator	14 weeks prior to installation
24V and Network Cables (Control Cabinet to Robot Base)	Line Integrator	Line Integrator	20 weeks prior to installation
Robot RTU	Line Integrator	Tesla	26 weeks prior to installation

6.2.2 Station Operator Service Poles

(Only for Manned / Back-up manual stations/kick-out and repair areas)

1) A Service pole is to be provided for each operator station per line side on the conveyor of a similar design as in the below diagram (two service poles per station in total, one on each side). All cabling is to be routed inside the pole and be concealed with all hardware planned to be installed on the operator side of the pole, looking aphetically clean from the aisle-way side.
2) A Station sign bracket is to be included on each service pole to attached printed station name signs that can be viewed from the aisle ways. The printing and installation of the signs to the supplied bracket system will be provided by others and is not in project scope.
3) The supply and installation of the IDF 6 block and flexible conduit connection to the supplied IT horizontal cable ducts is required for each service pole and connection point required to the Tesla network such as MCP panels / PLC. In the utility requirements provided by the vendor each service pole will request 6 network drops from the factory for tool controllers, scanners, printers, tangents, vision cameras (provided by Tesla teams), and NX-Witness

©Copyright 2024 Tesla, Inc. All rights reserved. Proprietary and confidential business information subject to and disclosed under applicable Non-disclosure Agreement and/or exempt from FOIA disclosure

cameras. Local switches are prohibited in service pole network drops as some of the equipment require POE.

4) Provide two 480VAC receptacle on any station with a manual multi spindles in the process area, and the receptacles shall be powered by the MPDPs for the line.
5) Provide 208V receptacles for reaction arms if they are needed for the bolting process wherever needed above the station.
6) The service pole is to support the following equipment.
    a. Ergo arm and attachment for the tangent (provided by Tesla but installed by Vendor)
    b. Tangent screen (provided and installed by Vendor)
    c. Tangent screen power block bracket (the power block is provided and installed by Vendor will connect to 120V outlet and mount the adapter in the vendor supplied bracket)
    d. IT IDF socket 6 way mounting plate only (The network and IDF RJ45 box will be provided by Tesla but vendor needs to show the location and quantity in the utility drawing request)
    e. Quad Power outlets (120VAC) with GFCI connected to the 120V plugin box or 120V XPDP.
    f. Emergency stop and Safety reset push palm button.
    g. Push palm button for operator release for stop/go stations
    h. Stack light
    i. PSU and safety and Standard IO blocks (PSU should be height accessible for maintenance)
    j. Atlas Copco Tool controller bracket
    k. Wireless Tool chargers brackets
    l. Barcode scanner mount bracket

©Copyright 2024 Tesla, Inc. All rights reserved. Proprietary and confidential business information subject to and disclosed under applicable Non-disclosure Agreement and/or exempt from FOIA disclosure

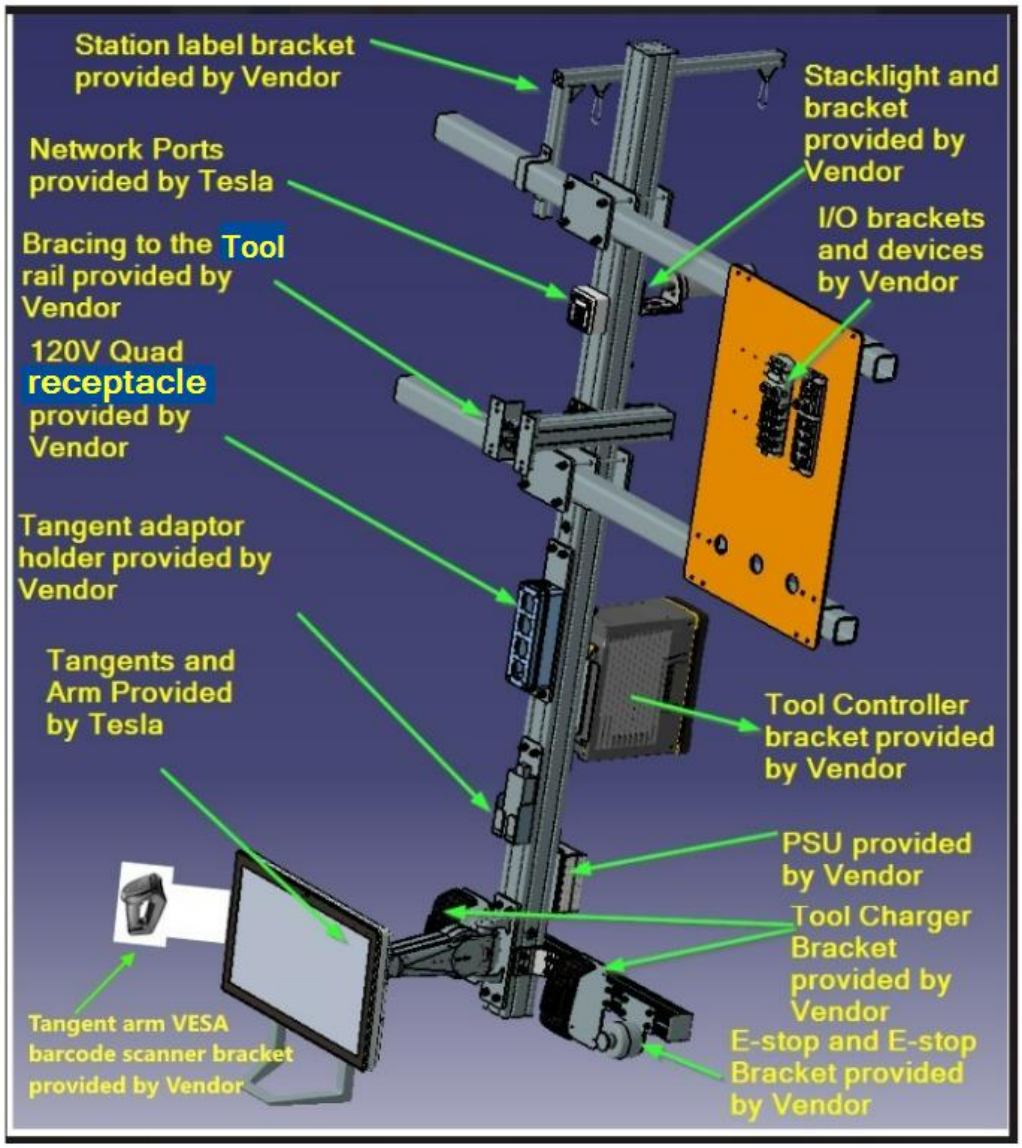

7) Service poles shall be installed at alternating corners of every station to maximize material space or at 75% of station pitch if a continuous assembly line and be able to be height adjusted for operator/process preference. The tangent bracket height and E-stop height from the ground should be at an 1850 mm elevation for safety and ergo purposes.

8) To enable each operator station to have an IO link to the PLC, each station requires a remote IP67 style module that is capable of Safety IO, IO link, and normal PLC IO to connect to plug in devices such as Tower Lamps, manipulator over travel sensors, emergency stop push buttons, and immediate stop push buttons. Follow the diagram below for standard layout and IO mapping. Refer to ***TS-0010782*** Assembly Shop Automation Scope of Work for more details on the operator service pole. All devices are within the scope of this RFQ except the Tangent, tangent arm, and tool controller, scanner procurement. Installation and bracket design is still in vendor scope for these components.

©Copyright 2024 Tesla, Inc. All rights reserved. Proprietary and confidential business information subject to and disclosed under applicable Non-disclosure Agreement and/or exempt from FOIA disclosure

9) The installation of the Ergotron style arm (tangent Arm), tangent screen to the service pole, including the install and powering of the brick power supply, cabling routing and connection of the ethernet patch cable of each service pole is to be completed by the supplier.
10) Refer to **TS-0011963 Safety Specifications** for Equipment for location requirements of emergency stops.
11) Each station should be able to have enough safety and standard PLC IO for future manipulators / lift assists / tooling reaction arms and other loading hoists. They should be allocated IO for over travel and warning switches to be connected to, including a reset limit switch, a warning limit switch, and a dual channel safety limit switch I/O device. It should be possible to at least install two manipulators per station without the need to expand the IO devices allocated per the station for both the left- and right-hand sides if operators are present on both sides of the line.
12) Generally, all safety devices should be dual channel and conforming to SIL2, Category 3, Pl-d electrical safety standards at a minimum. Each risk needs to be assessed individually and documented as part of the overall project risk assessment; however, at a minimum any design or equipment must comply to at least SIL2, Category 3, Pl-d Electrical system or higher by default.
13) Cable trays/ Cable ducts are to be installed along the length of the complete conveyor system mounted to the tool rail in a similar design to the below sample section drawing. The cable ducting is to be fully grounded as with the hanging tool rail structure. There should exist at least three cable trays/ducts installed on the tool rail structure to supply 480 [VAC] power for conveyor, 24 [VDC] power for I/O modules, Profinet cable, etc. as well as a separate horizonal cable duct for IT cabling for the corporate network. The cable trays must be electrical earthed or grounded to the structure at defined intervals.
14) Vendor should provide IT cable tray along the whole area of the line based on the network requirements that are shown in the utility drawings for MCP panels and service poles and kick out/repair areas. Each service pole will need 6 RJ45 ports that should be shown in the utility requirement drawing provided by the vendor. Per ***TS-0031736*** vendor should allocate the space in the layout beside each line for an IDF cabinet. The vendor is responsible to provide 120V/208V power to the IDF cabinet. The IDF cabinet should be in an area where the cable length for network is minimized based on network requirements. Vendor should provide 2 network drop requirements for each MCP panel and 6 network drops for each service pole on each side of each manual station. For other details regarding network requirements refer to the same TS document.

©Copyright 2024 Tesla, Inc. All rights reserved. Proprietary and confidential business information subject to and disclosed under applicable Non-disclosure Agreement and/or exempt from FOIA disclosure

6.2.3 Adhesive Systems

Adhesive/sealer pumps, hoses, temperature conditioning units (TCU's), displacement meters, controllers, nozzles, and robot end-of-arm brackets will be provided by Tesla. Pedestals will fall into Line Integrator 's scope, and all the stands should be bought off by Tesla Joining team.

Item to be specified	Specified by:	Ordered by:	Notes
Dispense material type (1C/2C)	Tesla	Tesla	Material type dictates heating system and pump count/positions.
Dispense bead lengths/positions	Tesla	Tesla / Line Integrator	Monitoring System for bead quality
Equipment installation (Mechanical/Electrical)	Line Integrator	Tesla / Line Integrator	20 weeks prior to installation
Material hose/cable lengths	Line Integrator	Tesla	20 weeks prior to installation
Dispense system mounting style (Pedestal/Robotic)	Line Integrator	Tesla / Line Integrator (non-standard equipment)	Accessibility study to be completed by Line Integrator with Tesla buyoff. Any non-standard EoAT designs required will be integrator scope to supply.
Nozzle detection systems/integration	Tesla	Line Integrator	Nozzle detection sensor to be purchased by Line Integrator following approved components list.
Vision systems/integration	Line Integrator / Equipment Vendor	Line Integrator	Vision system to be installed by Line Integrator. Commissioning to be done by Equipment Vendor.
System wet out	Equipment Vendor / Line Integrator	N/A	Equipment wet out to be performed by equipment vendor. Any non-compliant mechanical installation (leaking hoses and missing cables) will be done by Line Integrator
Flowrate calibration	Line Integrator / Tesla Buyoff	N/A	To be completed by Line integrator robotics team.
Bead path teaching/optimization	Line Integrator / Tesla Buyoff	N/A	To be completed by Line integrator robotics team.
Parameter setup/optimization	Tesla / Equipment vendor / Line Integrator	N/A	Parameterization for dispensing equipment will be done by Tesla Joining / Equipment Vendor teams. Robotic program integration following dispensing parameters will be done by Line Integrator.
PLC/Robotic logic implementation	Line Integrator / Tesla Buyoff	N/A	Dispensing logic including purge/inspection/ramp up are to be done by Line integrator.

©Copyright 2024 Tesla, Inc. All rights reserved. Proprietary and confidential business information subject to and disclosed under applicable Non-disclosure Agreement and/or exempt from FOIA disclosure

Quality buyoff	Tesla	N/A	Tesla team to perform teardown evaluation and quality buyoffs.
Additional installation services/training	Line Integrator	Line Integrator	Any additional installation services/training for line integration team to perform the job falls under integrator scope to acquire

6.3 Construction/Installation Equipment

1) Line Integrator shall provide:
   a. Polycarbonate/Poly (methyl methacrylate)/steel fencing/engineered fence where needed.
   b. Fluid header piping and hosing.
   c. Pneumatic header piping and hosing.
   d. Power and grounding cables, glands, connections.
   e. Power distribution panels (PDPs) and circuit breakers according to **TS-0031736** and Tesla supplied drawings & BOMs. Refer to **TS-0028621** and **TS-0028622**.
   f. Voltage step-down transformers & downstream power distribution panels for any voltage needed according to **TS-0031736** and Tesla supplied template drawings and BOM. Refer to **TS-0028623**.
   g. Maintenance & repair area 480V 3P & 120V 1P receptacles. Also, general use 120V 1P receptacles
   h. PLC (MCP panel), field IO blocks, controls devices, components, cables, should be Siemens platform. If other brands are required, Tesla will notify. MCP according to **TS-0031736** and Tesla supplied drawings & BOMs. Refer to **TS-0031161**.
   i. Field devices, power supply units (PSU) and/or panels, cables.
   j. Enclosures (booths) for light proof and/or soundproof (if needed)
   k. Cable trays.
   l. Equipment anchors, and fastening hardware
   m. Vibration dampening elements
   n. Lockout/tagout (LOTO) devices for control of all hazardous energy, placards
   o. All other items that are required by this Specification Document and/or attached Technical Specifications.
2) All individual electrical items shall follow the electrical standards (local requirements), which have been provided.
3) Due to very limited space and the need to keep production running without interruption, the line integrator will be responsible for the procurement and setup of trailers and/or CONNEX storage boxes for all incoming material to be staged outside of the building. The line builder is also responsible to provide an on-site team to manage these storage locations.
4) All equipment and items shall be installed and connected (mechanically, electrically, pneumatically and/or hydraulically), powered on and commissioned by the Line Integrator, including those provided by Tesla.

©Copyright 2024 Tesla, Inc. All rights reserved. Proprietary and confidential business information subject to and disclosed under applicable Non-disclosure Agreement and/or exempt from FOIA disclosure

5) Integrator is responsible for UL certifying their equipment and panels prior to installing in Tesla factories.
6) The Line Integrator is responsible for:
   a. Electrical Install: From Power Distribution and Control Panels out to field devices. This includes the panel build and everything inside. Tesla Facilities are responsible for the Bus plug and for running the main feed to the main 480V panels.
   b. Panel names should match with the name tags provided in the utility requirements based on the naming convention in **TS-0031736**. Line Integrator should ensure that the names on the panels will match the utility drawings since the arc flash labels provided by Tesla will be based on the utility drawings designed in electrical base build from factory design.
   c. Air & Water: From the Header/Truss level down to the Manifold and to the field devices. Tesla Facilities are responsible for running the utilities, at header/truss level, to where the line builder specifies.
7) Tooling kits will be installed, certified, and validated by the Line Integrator. Tesla must approve of the kits and validate the certification/repeatability reports.
8) Line Integrator shall be responsible for the hiring and operation of all equipment required to unload line equipment and convey it to the point of installation, including the equipment that is provided by Tesla. This includes conveyance of equipment to the second floor if that is the required location of installation.
9) For the handshaking locations between each line integrator, it is the responsibility of both parties to make sure that the handshaking is repeatable and there are no issues considering the target rate. If there is any scope gap that the vendor is unsure of, the vendor should communicate to Tesla engineers well in advance and should also consider asking any unknown scope in the design review meetings. Any gap in scope that is seen during commissioning will be the responsibility of the vendor to complete.
10) The Line Integrator should also be responsible to always keep 5S, disposing crates and empty packaging as needed and cleaning up after the job. Site should be always clean, and the line integrator is responsible for ensuring the site is clean and 5S is performed before the end of each shift. If Tesla power is not available for power tools, line integrators shall bring their own electrical generators to provide power and lighting.
11) Line Integrator is responsible for design work and permitting to meet local building code and/or laws and regulations. Line Integrator is responsible to attain licensed Professional Engineer (PE) stamps for structural, electrical, seismic anchoring (when needed), and mechanical drawings. Three (3) hard copies of each drawing must be printed and provided directly to Tesla Manufacturing Engineering (shipped or in person).
12) Line Integrator shall have a contractor license, and/or hire contractors with licenses, if licensure is required by local laws and regulations. Regarding the requirements and eligibility of all working personnel, refer to the Gigafactory Texas Construction Site Health and Safety Plan for details. The line builder must provide actual copies of all licenses for ALL trades. This also includes any certifications.

©Copyright 2024 Tesla, Inc. All rights reserved. Proprietary and confidential business information subject to and disclosed under applicable Non-disclosure Agreement and/or exempt from FOIA disclosure

13) Line Integrator to refer to "**TS-0010563** Body Line Facility Guidelines" for specific requirements.
14) Line Integrator provides overhead Starline T3 Busway for service pole power distribution per **TS-0031736**. Starline Bus Plugs and plugs will also be provided by the Line integrator. Quantities and locations of bus plugs to be determined by Line Integrator.

6.4 Integration/Commission

1) Line Integrator is responsible for providing all necessary integration, controls, vision system and/or robotics resources required to meet the deliverables for the Project.
2) Line Integrator will develop human machine interfaces (HMI) for all cells using Tesla provided template.
3) Line Integrator is required to develop the PLC code based on controls specifications and one-line drawing. Refer **BMS-0000314** for requirements.
4) English shall be used for communication during All phases (Proposal/Design/Integration/Commission). It is imperative that all project managers and technical leads have conversational fluency in English.
5) Line Integrator is responsible for ensuring all processes meet the designed cycle time, and all equipment supplied by the Line Integrator is running at the availabilities assumed in the Line Integrator's Discrete Event Simulation confirmed by Tesla.
6) Line Integrator shall provide production support free of charge if site acceptance has not been achieved by the scheduled date unless those delays were caused by Tesla.
7) Line builder needs to perform a high very detailed virtual commissioning workshop with Tesla controls and mechanical engineers to ensure the adequacy of information in HMI and the fluid programing based on different scenarios.
8) For equipment that is supplied by Tesla, it is the responsibility of the Line Integrator, if required, to procure the services of equipment Line Integrators deemed necessary to complete the commissioning activities.

©Copyright 2024 Tesla, Inc. All rights reserved. Proprietary and confidential business information subject to and disclosed under applicable Non-disclosure Agreement and/or exempt from FOIA disclosure

7 Responsibilities

7.1 Process and Tooling Design

Line Integrator is responsible for all process design and fixture/tool design. Tesla will provide the required product process build sequence to which the Line Integrator shall design the process.

- **Service parts:** The Line Integrator shall provide the ability to build service parts on-demand by a manual input scheduled on the controlling station HMI, where the service-part build begins. These service parts will be sent to the take-out or unload stations per Tesla's direction.
- **Glue & Bolting bypass and handling process:** The Line Integrator shall provide the ability to bypass gluing robots & bolting robots from the HMI and the handling process for the bypass of these robots. **TS-00180138** shall be followed for adhesive.
- **Glue expiration:** The Line Integrator shall implement part tracking functionality to track glue expiration status. If glue is expired, the part will be sent to the take-out or unload stations per Tesla's direction.
- Line Integrator shall present fixture/tool design for 40%, 90% and 100% ("Ready to Manufacture") compete reviews for which Tesla manufacturing engineers will approve at each of these design milestones.

7.2 Shipping, Packaging, Incoterm

1) The Incoterms is DDP at **Tesla's Fremont Factory**

2) Line Integrator is responsible for shipping to designated locations of Tesla. Shipping sequence and scheduling must be agreed to with Tesla. Please review **BMS-0000384** Supplier Shipping Instruction under Shipping Compliance.

3) Line Integrator must do in a manner to prevent shipping damage. Typically, this requires:
   a. Custom wooden pallets/crates with reinforcement for forklifting, and/or
   b. An enclosed truck with all applicable permits for transport to installation location.

4) International shipment must comply with Wood Packaging Material (WPM) Regulations according to ISPM 15 (International Standard for Phytosanitary Measures 15). Resource links include ISPM Standards and USDA APHIS resource page.

5) Line Integrator is responsible for inspecting the goods upon arrival at Tesla facilities and rectifying any shipping damage.

6) Line Integrator shall provide waterproof and fire-resistant coverings for all arriving and installed equipment within their scope of supply until the time of power on, to prevent damage from ongoing construction work inside and/or outside the building.

©Copyright 2024 Tesla, Inc. All rights reserved. Proprietary and confidential business information subject to and disclosed under applicable Non-disclosure Agreement and/or exempt from FOIA disclosure

7.3 Equipment Installation

1) Line Integrator must have experienced site manager(s) exclusively dedicated to this project for the entire duration of the installation, commissioning, and ramp phases. The site manager(s) is(are) required to host daily meetings during installation and commissioning to report the status and headcount for all the mechanical, electrical, controls and robotics tasks. A project manager needs to be present when any construction activity is taking place.
2) All mechanical equipment, tooling and required infrastructure shall be installed and commissioned by the Line Integrator.
3) Installation of all joining equipment (adhesive system, feeder system, bolting system, FDS system, etc.) shall be done by line integrator. Tesla joining team will provide guidance for installation if needed. Please refer to chapter 6.2 for more details.

7.4 Electrical guidelines and panel design

1) Line integrator shall refer to **TS-0031736** Vehicle Manufacturing Electrical Architecture and Requirements for points emphasized on repeated failures and then **TS-0010886** Electrical Specifications for general electrical requirements. Plus, any other installation and buy off guidelines submitted with this package.
2) Line integrator shall use EPLAN P8 Version 2023 of Electrical and Fluid (Pneumatic) design & deliverables.
3) During 220-Buyoff, Power-On, insulation measurements, voltage measurements, torque measurements, are performed by Line integrator and requirement for full buyoff.

7.5 Electrical, Controls and Robotics Support

1) Line Integrator is responsible for providing all necessary electrical, controls and robotics resources required to meet the deliverables for this project.
2) <u>The Line Integrator must allocate 1 experienced Controls Engineer for each PLC used with fluent English</u>
   <u>The Line Integrator must allocate 1 experienced Robotics Engineer for every 8 robots used with fluent English</u>
   <u>The Line Integrator must allocate 1 experienced Electrical Engineer for each Electrical Project with fluent English.</u>
3) The Line Integrator must ensure that ALL leads and Key Engineers (from all disciplines – Mechanical, Electrical, PLC, Robot, etc.) remain on the project from start (Design) to finish (Post Milestone 330 Completion). This will be confirmed with Manpower Resource Plan.
4) Fluent English is required for communication during integration.
5) All Line Integrator support will be required to take necessary training for PPE and tools to safely complete the job as per Tesla standards.
6) Line Integrator shall provide continued electrical, controls and robotics production support ***<u>free of charge</u>***, if the Site Acceptance milestone has not been achieved by the scheduled date, unless those delays have been caused by Tesla.

©Copyright 2024 Tesla, Inc. All rights reserved. Proprietary and confidential business information subject to and disclosed under applicable Non-disclosure Agreement and/or exempt from FOIA disclosure

7) Tesla Engineers have the right to work directly with Electrical, Controls, vision systems (ISRA / VMT) and Robotics sub-contractors.
8) All Electrical Engineers must complete EPLAN workshop with Tesla Engineer.
9) Line Integrator must provide a detailed schedule for supporting, including the number of engineers, PLC names, dates covering the installation, commissioning, ramp up and SOP.
10) Line Integrator is responsible for allocating an onsite EPLAN design engineer during the installation and commissioning phase of the project.

7.6 Virtual Commissioning and Robot Simulation

1) Line integrator shall perform robot and device simulation and virtual commissioning for this equipment. This activity allows the Line integrator and Tesla controls engineering to virtually run and test offline PLC, HMI, and robot programs independent of the physical machine state. Equipment for which Simulation and VC (Virtual Commissioning) has been performed undergoes shorter site commissioning and debug time at both the Line integrator and Tesla locations. This results in code with higher finish quality and compliant with Tesla standards.
2) Line integrator shall engage its own trained resources to perform robot simulation and virtual commissioning using Process Simulate and/or WinMOD (in accordance with **TS-0010680** Simulation Requirements and **TS-00010561** Process Simulate Virtual Commissioning Specification or **TS-0016474** WINMOD Virtual Commissioning Specification). Software Requirements will be process and project specific. This will be determined by Tesla Engineering. If the Line integrator cannot train internal resources for Virtual Commissioning, they must account for costs to have 3rd party companies perform the virtual commissioning and simulation.
3) Tesla will not allow more than 1 Tier of outside resource in either Simulation & Virtual Commissioning from the line builder. Meaning if the line builder is not doing the Simulation & Virtual Commissioning in house, then they must use only 1 supplier to complete all the milestones, not more.
4) Tesla does not provide Process Simulate/WinMOD software, licensing, or platform training to the Line integrator. Tesla will provide standard templates, template setup assistance and technical guidance during the joint Virtual Commissioning review to be hosted by the Line integrator and witnessed by Tesla.
    a. **TS-0010680** Simulation Requirements
    b. **TS-00010561** Process Simulate Virtual Commissioning Specification
    c. **TS-0016474** WINMOD Virtual Commissioning Specification
    d. **TS-0016489** WinMOD Virtual Commissioning Checklist
    e. **TS-0013422** – Virtual Commissioning Checklist
5) Virtual Commissioning Reviews shall occur after controls (PLC and HMI) code and robot and equipment simulation is complete and ready for onsite functionality. Virtual Commissioning will be based on Line Sequence of Operations.
6) Line integrator is responsible for providing 3D CAD with placed sensors and correctly placed equipment prior to VC commissioning.

©Copyright 2024 Tesla, Inc. All rights reserved. Proprietary and confidential business information subject to and disclosed under applicable Non-disclosure Agreement and/or exempt from FOIA disclosure

7) The virtual environment including PLC, HMI, Part Management, and robot programs, along with the simulation shall be designated “master copy” up until software is transferred to the physical machines for commission and debug in preparation for FAT/SAT.
8) After FAT, the code may be transferred back to the virtual environment for further development and debug, and re-designated as “master copy” while the physical hardware is shipped and re-installed at the final Tesla location.
9) Virtual commissioning deliverables include debugged PLC code, HMI faceplate functionality and verified robot programs that can be seamlessly uploaded to the equipment hardware after power-on.
10) As-built simulation and virtual environment data shall be delivered to Tesla after on-site cycle-time validation and before Line Integrator completes project.
11) Tesla manufacturing and controls engineers will attend virtual commissioning reviews to assess and approve virtual commissioning items included in the specifications and the following:
    a. HMI functionality.
    b. Safety hardware and its correct integration into the assembly line.
    c. Safety zone implementation.
    d. Robot zoning and implementation resulting in collision free robotic operations.
    e. Verify IO mapping and interfacing.
    f. Process sequence and implementation of interlocks within the production process
    g. Correct positioning of ‘handshakes’ within the process to ensure cycle times are optimized as early as possible.
    h. Multi-PLC interface.
    i. Dry-cycle and multi-mode testing.
    j. Ensure to test all special functions. (i.e., Empty Line, Stop Mode, End of Cycle, etc.)
    k. Process cycle time confirmation.
    l. Full tooling/equipment kinematic validation via HMI.
    m. Service part requests through HMI trigger and the build process.
    n. Glue bypass through HMI trigger and bypass handling process.
    o. Verify data transactions with upper-level systems (where possible)
12) Line integrator shall provide number of licenses on hand that company currently owns regarding VC software.
13) Line integrator and Subcontractors involved in virtual commissioning and simulations shall provide resumes of engineers with Criteria of past success.

7.7 Control Systems

1) All electrical and controls equipment must be selected from the **TS-0003248** Approved Components List following guidelines in **TS-0031736** Vehicle Manufacturing Electrical Architecture & Requirements unless given approval from Tesla Engineering.
2) All components must be installed and wired per manufacturer's best practices and installation manuals.

©Copyright 2024 Tesla, Inc. All rights reserved. Proprietary and confidential business information subject to and disclosed under applicable Non-disclosure Agreement and/or exempt from FOIA disclosure

3) Provide all necessary PLC licensing and diagnostic tools. Including the runtime licenses and provide license certificate.
4) Minimum PLC Performance Requirements.
    a. Safety cyclic tasks should default execution rate of 100ms.
    b. Safety cyclic tasks should not take more than 5ms to execute.
    c. Communication load will be limited to 35% maximum.
    d. Communication load should be expected to be 20%, +-5%, of the PLC load.
    e. The minimum continuous cyclic task interrupt time will be 5ms.
    f. Target PLC scan time for standard logic is not to exceed 10ms, average.
    g. Scan time stability should be proven during simulation and commissioning (+/- 25%, with some method to prove stability)
5) All equipment shall be provided with a mode control group (MCG) which can be a Siemens Operation mode (Opmode)
6) Use Tesla provided templates **TS-0015119** Siemens OpMode Layout to define the OP Mode distribution and span of control for the HMIs. Line integrator may adapt the OpMode Layout to meet equipment design requirements for other control system platforms.
7) Equipment data collection must be programmed in the PLC for each equipment for which OEE is relevant. Each OP Mode/MCG must have an Equipment Data Collection block to report OEE data for the OP Mode/MCG, addition to the OEE data for each equipment within the OPMODE or mode control group. Refer **TS-0029840** Manufacturing Metrics and Alarms Specification to prepare OEE data configuration for each equipment and OP MODE/Zone.
8) Use Tesla provided templates for electrical one-line diagram, network topology diagram, safety layouts, IP addresses and software design matrix. All designs must be approved and code generated by Tesla controls engineers prior to developing the first PLC/HMI program for the line.
9) A 24VDC Uninterruptible Power Supply (UPS) power supply system must be capable of keeping the PLC and Industrial Personal Computers (IPCs) operational for 2 hours in the case of a power loss.
10) All network switches must have an SD card or plug memory module installed that allows for hardware to be swapped and configuration to be transferred effortlessly.
11) Local area network (X1) Network switches with cable runs of 100 meters or greater should have an intermediate switch.
    a. All automation fieldbus connections located outside of a cabinet will be D-coded M12 for 100mbps or X-coded M12 for 1GB/s
    b. All connections between switches will be established using 1 GB/s connections
    c. **Fiber is only permitted with approval**
12) PLC to PLC Network switch interconnections with cable runs of 100 meters or greater should have an intermediate switch or a repeater.
    a. Network connections between PLC's should be established using Fieldbus couplers (ex PN-PN coupler for Profinet) connected to the local network interface (X1)
    b. Dedicated PLC to PLC networks using dedicated PLC interfaces are only permitted with approval

©Copyright 2024 Tesla, Inc. All rights reserved. Proprietary and confidential business information subject to and disclosed under applicable Non-disclosure Agreement and/or exempt from FOIA disclosure

13) Lineside Network Security Appliance
    a. One security appliance will be provided by the Line integrator in every main control panel
    b. All connections on the security appliance will be dictated by Tesla and other ports will remain unused
14) Refer to **TS-0031736** Vehicle Manufacturing Electrical Architecture & Requirements for network connection details and example layouts for Siemens.
15) Use miniature, resettable circuit breakers for overcurrent protection of PLC IO Cards and Remote IO modules. Refer to Tesla Approved Component List for device selection.
    a. All outputs connected to either PLC local output cards installed in the main PLC chassis or remote network output modules, including any nodes that are not electronically fused with a diagnostic ability to identify short circuits (eg Relay outputs), and overloads must be protected by a miniature resettable circuit breaker as the application shall require. Refer to Tesla Approved Component List.
16) PLC and HMI programs must complete virtual commissioning checklist (**TS-0013422**) for conveyance (WinMOD) and robot cells (Process Simulate) and all related safety devices (WinMOD & Process Simulate) prior to on-site commissioning.
17) The PLC shall control and initiate handshakes for all transfers in and out of the system.
18) The PLC shall track vehicle position and sequence throughout the line.
19) The line shall have data (Barcode or RFID) readers installed to ensure that the part or body sequence is transferred from one process to another. (Application Specific)
20) Line Integrator is required to develop the PLC code based on controls specifications, electrical and networking One-line diagrams. The PLC code will be developed using Tesla generated PLC code to be used as a base for PLC, HMI, and a standard template for Ignition development.
21) Line integrator will be provided with various templates to submit design documents, specified in the RFQ. These design templates are pre-requisites for auto code generation. Skeleton Structure for PLC logic will be auto generated using the Tesla Code Generator. Any remaining programming work and additions of devices is to be executed by the line integrator.
22) Tesla will audit PLC code throughout the lifecycle of the development using internal tools and checklists.
23) Add-On Instructions (AOI) and/or Function Blocks (FB) shall be developed by the Line Integrator complying with Tesla's standard and must be approved by Tesla. When Tesla has an existing AOI or FB available, the Line Integrator shall use the provided Tesla AOI or FB as a base. Any proposed changes to the AOIs or FBs must be discussed and approved by Tesla Controls Engineers. Development of Function blocks must follow **TS-0026447** Function Design Requirements.
24) Tesla will not accept software that is protected and locked by Line integrator.
    a. Line Integrator must provide backup source code for all controllers.
25) A Library Update shall be performed at the following milestones:
    a. V0 RFQ - MS030
    b. V1 Code Gen - MS090
    c. V2 Install - MS210

©Copyright 2024 Tesla, Inc. All rights reserved. Proprietary and confidential business information subject to and disclosed under applicable Non-disclosure Agreement and/or exempt from FOIA disclosure

d. V3 Handover to Sustaining - MS400

26) Program cannot be handed off until Tesla runs the static analyzer with results that are satisfactory to the Tesla Automation Controls Engineering team.

7.8 Robotics

1) Mechanical and electrical configuration should utilize Tesla standard packages. Deviations must be approved by Tesla Robotics team.
2) All robots should be set up with the applicable Tesla Core software supplied by the Tesla Robotics team to ensure robots are configured with proper base settings.
3) Reference **TS-0002936** Robot Specifications for specific information and requirements on various elements of robotics. Any deviation from this document must be approved by a member of the Tesla Robotics team.
4) Line Integrator is responsible for adhering to all applicable robot safety specifications laid out in **TS-0011963** Safety Specifications for Equipment.
5) Line Integrator will be responsible for passing all robot buyoffs. Tesla Robotics team will assess whether robots are satisfactorily configured to Tesla specifications.
6) Line Integrator must set up applications according to **TS-0010609** Reference Robot IO Map.
7) Line Integrator will be responsible for receiving approval on robot safety designs from Tesla Robotics team for all individual robots in the project. This approval will come in 2 phases: first through a “Robot safety Concept” in the early phase of the project and second through the official 270 buyoff process. A copy of **TS-0012396** Template Robot Safety Design must be filled out for each robot to receive approval.
8) Tesla will provide tech packages/Templates to the Line Integrator for all existing applications that are used in the Tesla Facility. For any new applications to Tesla, the line builder and Tesla will Co-Develop the tech package/template to be used. The Line Integrator is responsible for all Offline Programming for the line and The Tesla Robotics Team will approve.
9) Code or software constructs that are used to control field devices by the robot must be generated or approved by the Tesla Robotics team.
10) All Stations with 2+ robots utilized should be capable of "Auto Homing” and should have a pre-programmed routine for accomplishing this task as directed by Tesla Engineering. **TS-0002936**
11) All robots utilized in Assembly shop shall be configured with a task select program structure and use space functions to indicate in and out of fixture state to the PLC
12) Where applicable, the Line Integrator must program and validate degrade backup solutions where robots share tasks when one must be taken offline for maintenance. This should be considered at Critical Stations such as Geo Stations.
13) Calculon is a script that will analyze OLPs (from the Line Integrator) according to Tesla Robot Spec and provide a report with all errors encountered. Once line builders receive the report, they need to correct the errors.
14) The Line Integrator will follow all initial design and specification guidelines for vision processes, and any specific deviations would have to be approved by Tesla Automation Controls Engineering.

©Copyright 2024 Tesla, Inc. All rights reserved. Proprietary and confidential business information subject to and disclosed under applicable Non-disclosure Agreement and/or exempt from FOIA disclosure

15) The Line Integrator would be responsible for all teach fixtures, calibration tools and maintenance fixtures for the scope of all robot cell supply.
    a. The teach fixture will be referenced to car 0 when the fixture pertains to a car related process.

7.9 Human Machine Interface (HMI)

1) Include at least two Maintenance HMIs per Opmode to provide a method of operating the machinery in automatic mode and manual functions including information and alarming information.
    a. The Maintenance HMI must provide a central overview of the conveyor safety system, a method of manual and maintenance operations and alarms / statuses of all faults and devices incorporating the complete conveyor system.
    b. The quantity and locations of these panels will be agreed during the design phase using **TS-0015119** Template_Siemens OPMODE Layout or equivalent mode control group plan, with final approval and acceptance of the plan after the equipment is integrated into the 3D layout and a walkthrough review is conducted.
    c. All equipment HMIs to be placed in a convenient location for troubleshooting, on all accessible sides of the equipment
        i. This can include locations adjacent to safety gates, or manual stations
        ii. Line integrator to place all conveyance section HMIs within 10 meters or convenient line of sight for conveyance sections (or as the safety layout shall require) on both sides of the conveyance section.
    d. Line integrator to provide a mobile operator panel/teach pendant with enabling switch for all equipment with servo or positioning axes in a convenient location.
    e. Exception to only one HMI per Opmode may be approved if application is single station/small equipment.
2) Locate an HMI wherever equipment may need to be operated in manual mode, for example when maintenance personnel can see equipment movements.
3) To assist with vehicle identification and manual thing serial entry, install an operation panel at the start of each line.
4) Use the SIMATIC IPC477E Pro or approved equivalent with an extension unit and a minimum screen size of 22"
5) Provide all supplied HMI panels with WINCC runtime and Prodiag licenses and license certificates (use Tesla HMI part number from approved components list for Siemens components), or any equivalent approved Line integrator HMI licenses as approved by Tesla Automation Controls Engineering.
6) All HMI Panels must come with an extension unit as defined within **TS-0031736** Vehicle Manufacturing Electrical Architecture and Requirements.
7) Line Integrator will develop human machine interfaces (HMI) and interface to the SCADA (Ignition) for all equipment using Tesla provided template.

©Copyright 2024 Tesla, Inc. All rights reserved. Proprietary and confidential business information subject to and disclosed under applicable Non-disclosure Agreement and/or exempt from FOIA disclosure

a. The line integrator may need to design HMI layouts in vertical, horizontal, left or right orientations for ease of troubleshooting as the line layout may require.
b. The extension unit may also be required to be oriented in the same direction as the screen with appropriate rotation of labels.

©Copyright 2024 Tesla, Inc. All rights reserved. Proprietary and confidential business information subject to and disclosed under applicable Non-disclosure Agreement and/or exempt from FOIA disclosure

8 Specifications and Deliverables

8.1 Tesla Standards, Templates, and Checklists

- In order of precedence, Tesla standards are to be used for answering technical questions. All equipment being designed and provided to Tesla must satisfy all these standards.
- Below are all Tesla provided standards/templates/checklists that are attached with the package.
- Topics and issues not dealt with explicitly by the specifications shall comply with the applicable Tesla standards and be confirmed by Tesla Manufacturing Engineer.
- Revised Tesla safety standards are to be accepted by Line integrator throughout the project lifecycle without an engineering change order. All other Tesla standards are to be accepted up to milestone 60 in **BMS-0000314** without an engineering change order.

Tesla Technical Standards	
Spec Number	Spec Name
Project Workflows	
BMS-0000314	Developing Discrete Manufacturing Equipment
TS-0030850	Supplement - Developing Discrete Manufacturing Equipment
TS-0018442	Equipment Safety Handover Procedure
Equipment Specifications	
TS-0000666	Workstation Naming Convention
TS-0033995	Vehicle Manufacturing Naming Convention Addendum
General Tesla Standards	
TS-0002127	Mechanical Specifications for Equipment
TS-0003248	Approved Components List
TS-0010886	Electrical Specifications for Equipment
TS-0019197	Electrical Naming Conventions
TS-0010915	EPLAN Drawing and Structure Standards
TS-0011963	Safety Specifications for Equipment

©Copyright 2024 Tesla, Inc. All rights reserved. Proprietary and confidential business information subject to and disclosed under applicable Non-disclosure Agreement and/or exempt from FOIA disclosure

TS-0014995	Network Design Requirements for Equipment
TS-0002936	Robot Specifications for Equipment
TS-0020653	Electrical Installation Benchmark
TS-0018282	Electrical Acceptance Checklist
TS-0010714	Controls Acceptance Checklist
TS-0002559	Supplier Safety Requirements
TS-0022769	Chemical Process Hazard and Risk Assessment Guidance
TS-0020837	Equipment Specification for Robot Vision
PLC Standard	
TS-0011193	Tesla Siemens Controls Standard
TS-0011194	Tesla Siemens Controls Standard Appendix
Virtual Commissioning and Simulation	
TS-0010680	Simulation Requirements
TS-0022377	Simulation Checklist
TS-0010561	Process Simulate Virtual Commissioning Specification
TS-0016474	WINMOD Virtual Commissioning Specification
TS-0013422	Virtual Commissioning Checklist
TS-0016489	WinMOD Virtual Commissioning Checklist
TS-0019512	Robotics XML Document - VC Supplement
Vehicle Manufacturing Shop Standards	
BMS-0000438	BIW Mfg Change Order Process
TS-0004760	Body Line Design Standards
TS-0004826	Body in White Discrete Even Simulations
TS-0004835	Body Assembly Joining Fixtures and Inline Measurement Fixtures

©Copyright 2024 Tesla, Inc. All rights reserved. Proprietary and confidential business information subject to and disclosed under applicable Non-disclosure Agreement and/or exempt from FOIA disclosure

TS-0004844	Tooling Dimensional Certification
TS-0004845	Tooling Repeatability Certification
TS-0010560	Body Line Process Element Times
TS-0010562	Body Line Manufacturing Roles and Responsibilities
TS-0035992	Vehicle Assembly Line Manufacturing Roles and Responsibilities
TS-0010563	Body Line Facility Guidelines
TS-0010569	CAD Naming Convention
TS-0010689	BIW Project Schedule Example
TS-0010692	Body in White Tool Buy Off Standard
TS-0011613	Body Line Installation Standards
TS-0011614	Body Line Pipe Standards
TS-0010925	Vehicle Conveyor Standards for Equipment
TS-0014576	Body in White Robot Ordering Specification
TS-0014589	BIW Prototype Shop Mfg Roles and Responsibilities
TS-0014590	Prototype Shop Body Assembly Joining Fixtures
TS-0014773	Body in White 2D Layout Specification
TS-0022302	Robot Equipment Interface
TS-0010782	Assembly Shop Scope of Work
TS-0031736	Vehicle Manufacturing Electrical Architecture and Requirements
TS-0029840	Manufacturing Metrics and Alarms Specification
TS-0026447	Function Design Requirements
TS-0031799	Structural Design Input Requirements

©Copyright 2024 Tesla, Inc. All rights reserved. Proprietary and confidential business information subject to and disclosed under applicable Non-disclosure Agreement and/or exempt from FOIA disclosure

Line integrator Templates	
TS-0010585	Template Electrical One Line
TS-0010835	Template Project for EPLAN Drawings
TS-0010584	Template Network Topology
TS-0035974	VMCE Template IP Address List
TS-0010587	Template Software Design Diagram
TS-0010839	Template Equipment FMEA
TS-0010617	Template Risk Assessment Form
TS-0010841	Template Safety Device Layout
TS-0010608	Template Robot Data Sheet
TS-0012396	Robot Safety Design Template
TS-0011569	Template 250 Safety Buy Off
TS-0010923	Template 270 Fanuc Safety Buy Off
TS-0010610	Template 270 KUKA Safety Buy Off
TS-0011667	Template 290 Safety Buy Off
TS-0010590	Template Tesla LOTO Placard
TS-0011253	Template Tesla LOTO Placard Symbols
TS-0014883	Project Checklist Template
TS-0015119	PLC Template OPMode Layout
TS-0013340	Template PLC Interface List
TS-0035975	VMCE Template Software Design Matrix
TS-0021153	Template_Arc Flash Calculation Inputs
TS-0025565	Vision Application Questionnaire
TS-0030222	Controls Concept Template

©Copyright 2024 Tesla, Inc. All rights reserved. Proprietary and confidential business information subject to and disclosed under applicable Non-disclosure Agreement and/or exempt from FOIA disclosure

TS-0028621	Power Distribution Panel (Siemens Busbar System)
TS-0028622	Power Distribution Panel (Rittal Busbar System)
TS-0028623	Transformer Power Distribution Panel
TS-0031161	Main Control Panel
TS-0031876	IPC Control Panel
TS-0031877	PN Coupler Panel
TS-0010687	Template_Vendor Manpower Plan
TS-0010688	Template_BIW Onsite Manpower Planning Sheet
TS-0010699	Template_Process Sheet
TS-0011978	Example_RCSCycleTime
TS-0012630	Tooling Repeatability Report Template
TS-0012660	Template_Ready To Ship Buy-Off Checklist
TS-0012663	Template_Throughput Acceptance Data Sheet
TS-0012671	Template_Cycle Time Acceptance Data Sheet
TS-0012672	Template_Ready To Build Acceptance Data Sheet
TS-0012673	Template_Ready for SOP Acceptance Data Sheet
TS-0014754	Template_Master Robot Matrix
TS-0030302	Control & Electrical Project BOM Template
TS-0030304	EQL Panel Schedule and Utilization US Template
TS-0030305	PSU Schedule and FLA Calculations Template
TS-0018138	Template Adhesive Process Design
Ergonomic Templates	
TS-0021574	Template_Ergonomics Buyoff for Lift Assist

©Copyright 2024 Tesla, Inc. All rights reserved. Proprietary and confidential business information subject to and disclosed under applicable Non-disclosure Agreement and/or exempt from FOIA disclosure

TS-0021575	Template_Ergonomics Buyoff for Workstation Design, Tooling and Process
TS-0021733	Template_Ergonomic Design Target Master Bundle-NA GER
TS-0034058	Template_EHS Design Target for Pedestrian and Material Flow Aisle
Process Safety Templates	
TS-0029777	Chemical Process Hazard and Risk Assessment HAZOP LOPA Template PHAPro
TS-0025628	Template_Chemical Process Pre-Startup Safety Review (PSSR)
TS-0024878	Template_HAZOP HAZID Form
TS-0025616	Template_Combustible Dust Hazard Analysis
TS-0027359	Template_HazMat Inventory
Reference Examples	
TS-0032107	VMCE Template
TS-0014876	Fanuc Robot Program Templates 2023
	Fanuc "TeslaCore" Vendor Version_2
TS-0014877	KUKA Robot Program Examples 8.6.6
TS-0014879	KUKA Tech Package
TS-0010609	Reference Example Robot IO Map
TS-0020845	Reference Example PLC Interface List
TS-0021824	EPLAN Macro Creation Guidelines
TS-0021825	EPLAN Part Definition Guideline

8.2 Equipment Performance Validation & Deliverables

1) Line Integrator is responsible for ensuring the package of equipment meets the design goals and metrics specified in Section 2.2 and 2.3, the designed station cycle time is achieved, and all equipment supplied by the Line Integrator is running at the availabilities and OEE quoted by the Line Integrator.

©Copyright 2024 Tesla, Inc. All rights reserved. Proprietary and confidential business information subject to and disclosed under applicable Non-disclosure Agreement and/or exempt from FOIA disclosure

2) Line Integrator is responsible for ensuring all operations meet Tesla's regulatory safety requirements.
3) Line Integrator is responsible for ensuring all manual operations meet Tesla's ergonomic requirements.
4) After 100% JPH milestone has been achieved by the Line Integrator, all equipment will be monitored by Tesla Manufacturing Engineering for a minimum of 30 days where Line Integrator is responsible to provide any necessary engineering resources to support debugging during production.
5) Issues will be tracked by Tesla Manufacturing Engineering during this time to identify outstanding issues and create a punch list of known issues. Tesla Manufacturing Engineering will determine whether any issues are within the scope of work defined in this specification and determine corrective actions.
6) Line Integrator invoice approval is gated by completion outstanding items on JIRA that are determined to be within scope of work.
7) Line Integrator invoice approval is gated by performance and process milestones called out in this specification document.

8.3 Final & Mid-Project Documentation Deliverables

Mid-Project Documentation Delivery - Throughout the project, Tesla expects the flow of documentation that matches **BMS-0000314** - *Developing Discrete Manufacturing Equipment.* To keep track the flow of these documents and have full transparency with the line builder, **BMS-0000314** *Documentation Checklist* is provided.

Final Documentation Delivery - The Final Documentation Package should incorporate all documentation shown below and should be delivered to Tesla at **Start of Build (SOB) & Final Handover**. The following documentation and data shall be supplied to Tesla to achieve 'Final Handover' milestone. Tesla will provide Templates for the documents. All documentations should reflect as-built condition if on-site execution has difference to final design. PLC and Software programs can be requested and reviewed at any time by Tesla. The Line Integrator is required to give documentation support for, at minimum, 6 months post Final Handover.

Item #	Description	File Format(s)
1	Architecture, Civil, Seismic and/or Structural Drawings	DWG (AutoCAD 2018) and PDF and hard copies with stamps (when required)
2	Assembly Tooling CAD Models 3D	STEP
	Assembly Tooling BIM Models 3D	NWD file in Navisworks with Building reference
3	Assembly Tooling 2D drawings to component level	DWG or DWF and PDF
4	Assembly Equipment CAD Models 3D	STEP

©Copyright 2024 Tesla, Inc. All rights reserved. Proprietary and confidential business information subject to and disclosed under applicable Non-disclosure Agreement and/or exempt from FOIA disclosure

5	Complete Purchased-parts Documentation (Brochures, Manuals, etc.)	Native format
6	Controls One-line	EPLAN 2023 and Microsoft PowerPoint
7	Discrete Event Simulation (DES)	Native format and Microsoft Excel
8	Electrical Bill-of-material (E-BOM)	EPLAN 2023 & Microsoft Excel
9	Electrical Schematic	EPLAN 2023 and PDF
10	Facilities Utility Matrix, CAD	Microsoft Excel, AutoCAD 2018
11	Arc Flash Calculation	Microsoft Excel
12	Fluids and Hydraulics Schematics (P-PLAN)	DWG (AutoCAD 2018) and PDF and EPLAN 2023
13	General Maintenance Documentation	Microsoft Word (including procedures to calibrate, align, home and setup system)
14	PLC & HMI Program.	Siemens TIA portal
15	Safety Device Layout	Microsoft PowerPoint and EPLAN 2023
16	HMI User Guide	Microsoft Word
17	Controls Concept	Microsoft PowerPoint
18	Software Design Diagram	Microsoft Visio
19	Software Design Matrix	Microsoft Excel
20	Lockout/Tagout Placard	Microsoft Word
21	Mechanical Bill-of-material (M-BOM)	Microsoft Excel
22	Mechanical Layout 2D	DWG (AutoCAD 2018) and PDF
23	Electrical Hardware Layout 2D	DWG (AutoCAD 2018) & EPLAN 2023 and PDF
24	Overall Facility 3D Layout	Navisworks
25	Network IP Address List	EPLAN 2023 & Microsoft Excel
26	Network Topology	EPLAN 2023
27	Pneumatic Schematics	EPLAN 2023 and PDF
28	Preventive Maintenance Plan	Microsoft Word
29	Process Cycle Time Study	Microsoft Excel
30	Process Failure Modes & Effects Analysis (PFMEA)	Microsoft Word or Excel
31	Process Specification Sheets	Microsoft Excel
32	Robot Data Sheet	Microsoft PowerPoint
33	Robot Safety Design	Microsoft PowerPoint
34	Robot Harness/Dress Pack Drawings	DWG (AutoCAD 2018) or EPLAN 2023 and PDF
35	Robot I/O Map	Microsoft Excel
36	Robot Programs and Variables Backup	Native format
37	Robot Safety Buyout Form	Microsoft PowerPoint
38	Robot Safety Risk Assessment	Microsoft PowerPoint
39	Robot Simulation Study	Process Simulate TX2402
40	Recommended Spare Parts List	Microsoft Excel (Tesla Format)
41	Tooling Measurement Reports	Microsoft Excel (Tesla Format)
42	Tooling Repeatability Reports	Microsoft Excel (Tesla Format)

©Copyright 2024 Tesla, Inc. All rights reserved. Proprietary and confidential business information subject to and disclosed under applicable Non-disclosure Agreement and/or exempt from FOIA disclosure

*The use of SOLIDWORKS 2020 is subjected to prior written approval by Tesla Manufacturing Engineer.

8.4 Training and Support Deliverables

1) The Line Integrator shall provide 5 days of maintenance technician training at Tesla Facility during Site Acceptance Testing (SAT).
2) The Line Integrator shall provide 5 days of Engineer training at Tesla Facility during Site Acceptance Testing (SAT).
3) The Line Integrator shall provide 2 days of Associate training at Tesla Facility during Site Acceptance Testing (SAT).
4) The Line Integrator should consider that there will be “around the clock” shifts and to be prepared to train on all shifts.
5) The Line Integrator shall be flexible on training days if students are not available due to unforeseen circumstances. Tesla will pre-notify the Line Integrator to discuss the change.

©Copyright 2024 Tesla, Inc. All rights reserved. Proprietary and confidential business information subject to and disclosed under applicable Non-disclosure Agreement and/or exempt from FOIA disclosure

9 Commercial Items

9.1 Buyoff Milestones

- "**BMS-0000314 - *Developing Discrete Manufacturing Equipment***" is the foundation and framework on which this project will be driven from start to finish. ALL project milestones, deliverables, and payment milestones will be derived from this document. The Line Builder MUST read and understand this document.
- At each phase of the Project, buyoff milestones will need to be achieved to ensure that the project remains on track for successful launch. Tesla will provide the templates for the buyoff tools and be the approver, however it is the Line Integrator's responsibility to populate the documents and confirm that the buyoff criteria are met.

9.2 Line Integrator Proposal Deliverables

Proposals shall be delivered by area. Each area proposal shall contain:

1) Process plan.
2) Process sequence.
3) Area layout (overlying with building grid) in DWG (AutoCAD 2018) format.
4) Cycle time charts for each operator, robot, machine, and other mainstream process equipment.
5) Equipment list with type and quantity, including all Tesla-provided equipment.
6) Controls Concept (**TS-0030222** Controls Concept Template, **TS-0031736** needs to be reviewed prior to populating)
7) Onsite headcount and activity duration for all internal and outsourced contractors using the provided template (**TS-0010687** Supplier Manpower Plan Template).
8) Line Integrator's internal available capacity and detailed headcount allocation for each phase of the project.
9) List of executed projects like the project outlined in this RFQ.
10) Detailed project schedule in Microsoft Project format breaking down all milestones of the Scope of Work.
11) Detailed cost breakdown using provided template. The cost breakdown sheet will be the reference for all contract, later deliverable, and scope change negotiations. It is the Line Integrator's responsibility to include as much detail as required in the sheet. Separate line item for warranty coverage extended more than 3 years. Separate line item for shipping and delivery. Separate line item for taxes and duties.
12) Hourly pricing for on-site assistance & services for each category of function, considering the years of experience of the resource.

©Copyright 2024 Tesla, Inc. All rights reserved. Proprietary and confidential business information subject to and disclosed under applicable Non-disclosure Agreement and/or exempt from FOIA disclosure

13) Preliminary Long Leads List.
14) Detailed descriptions of all part conveyance technologies and unique Line Integrator technologies being presented.
15) Equipment specifications and target metrics
16) Initial Discrete Event Simulation (DES) for integration project.
17) Facilities, civil, structural, utilities requirements.
18) List of key personnel assigned to the Scope of Work (i.e., project manager, site manager, safety coordinator, design lead, specialist/programmer, etc.), clearly detailing the names, titles, years of experience in a similar role and number of days dedicated to this Scope of Work.
19) List of installation and commissioning subcontractor companies that will be used by Line Integrator if applicable.
20) Signed General Terms and Conditions ("GTC") for Production Equipment and Services.
21) Certificate of Insurance in accordance with GTC. All risk insurance certificates are required upon award if installation is part of Line Integrator Scope.
22) Line Integrator Bid Submission Confirmation (Last Page on this RFQ)

9.3 Project Management

1) Line Integrator's representatives (e.g., Project Managers, process/mechanical/joining/controls technical engineers) who interface directly with Tesla's personnel must be able to communicate fluently in English.
2) The Line Integrator should strive to have all online design reviews and team meetings with Tesla's personnel within the local typical working hours (6am-6pm) of the receiving plant. Exceptions will need to be reviewed with the lead Tesla Engineer.
3) Line integrator shall schedule and execute a Project Kickoff Meeting to demonstrate understanding of project management and execution for this project. Project Kickoff Meeting should take place with both Tesla and Line integrators internal team before the project starts.
4) Line Integrator shall use Jira (on Tesla server) as the primary project management and issue tracking tool.
5) Line integrator shall designate an experienced Project Manager to provide detailed tracking and schedule with step-by-step work needed and target dates of designated work to be finished. Tesla reserves the right to ask for detailed plans in Microsoft Project.
6) Tesla will not accept any schedule that is defined on a "weekly" refinement. At minimum, the Line Builder must give a "daily" refinement on all schedules.
7) Line Integrator shall designate a Technical Project Lead to provide updates with technical depth if necessary.

©Copyright 2024 Tesla, Inc. All rights reserved. Proprietary and confidential business information subject to and disclosed under applicable Non-disclosure Agreement and/or exempt from FOIA disclosure

8) Line Integrator's Project Manager shall host Tesla project related personnel at the Line Integrator's facilities and/or the facilities of any Sub-Contractor of the Line Integrator upon request, during the manufacturing phase.

9) Line Integrator's Project Manager shall verify that all work executed by the Line Integrator follows this RFQ and all applicable specifications, codes, and standards.

10) Line Integrator's Project Manager shall provide weekly project updates while work is ongoing. At a minimum, weekly updates shall consist of an email containing an updated project schedule showing the status of all items, and a clear list of project schedule risk items requiring attention. Tesla reserves the right to ask for and receive Daily Project update meetings.

11) Line Integrator's Project Manager shall inform Tesla as soon as any delays to the project schedule are found or cost overruns expected.

12) Any modification or change order made during the project by the Line Integrator or Tesla that impacts the project scope, cost or timeline shall be formalized by the Line Integrator's Project Manager and require written approval from Tesla.

13) Line Integrator's Project Manager and Site Manager shall be responsible for the following tasks relating to any onsite labor supplied or subcontracted by the Line Integrator –
    a. Complete Pre-Project Questionnaire (and/or Job Hazard Analysis, JHA) and provide copy of safety manual at least two weeks prior to arrival on Tesla premises.
    b. Conduct Pre-Work Risk Assessment with Tesla representatives.
    c. Ensure all Line Integrator's personnel including subcontractors receive safety onboarding orientation/training, set up by Tesla Environment, Health, Safety (EH&S) department.
    d. Submit physical access (badge) request and/or production network access request with supporting documentation at least two weeks prior to arrival on Tesla premises.
    e. Develop Pre-Task Plan (PTP) prior to each shift.
    f. Ensure equipment is moved from laydown area to build area.

14) Each company contracted by the Line Integrator requesting access to Tesla data, shall sign a Tesla Non-Disclosure Agreement, prior to releasing any Tesla data with the company. The access to Tesla data shall be revocable immediately and anytime upon Tesla's request.

15) After the commencement of production, it shall be the Line Integrator's responsibility to ensure that all work performed during production hours is completed without any disruption to the production. Line Integrator shall notify Tesla of any possible interference between production and the work outlined in this document as soon as it becomes known to the Line Integrator.

16) Any work that is not compliant with this Specification Document and all associated specifications, codes and standards shall be reworked at the expense of the Line Integrator.

17) Contradictions with any documents provided shall be brought to the attention of Tesla's Project Lead.

©Copyright 2024 Tesla, Inc. All rights reserved. Proprietary and confidential business information subject to and disclosed under applicable Non-disclosure Agreement and/or exempt from FOIA disclosure

9.4 Payment Terms and Milestones

The Payment Term for this project is end of month (EOM) 90 days. Unless specified in a separate document referring to this Specification Document, the project phases shall follow the phases shown in Section 2.4 of this document. Invoicing is approved when deliverable(s) for payment milestone defined is completed and approved by Tesla. Deviation from these payment terms and milestones shall be discussed only with Tesla's Purchasing/Commercial Team.

Milestones	Payment %	Criteria
Design Approval	20%	**BMS-0000314 Milestone 130 Achieved**
Site Acceptance at Run Rate (SAT)	20%	**BMS-0000314 Milestone 220 Achieved** **BMS-0000314 Milestone 250 Achieved** **BMS-0000314 Milestone 290 Achieved**
Final Acceptance	60%	**BMS-0000314 Milestone 400 Achieved**

9.5 Engineering Change Request / Order Process

- Engineering Changes are bound to happen given the speed at which Tesla moves. There are (2) distinct types of Engineering Changes that will occur:
    - **Process/Equipment Related**: This is a change to the overall line design or number of equipment quantities needed. Tesla Understands that these changes impact overall cost of the project. The breakpoint of where these changes start to occur additional cost will be at "Kickoff/PO submittal" (Milestone 30 in **BMS-0000314**). If a process/equipment related change happens after this milestone, an ECR is acceptable but is not acceptable before.
    - **Tooling Related**: This is a change to the tooling design due to fluctuation in product design. We know that the design will fluctuate, and the Line builder should prepare for that. The breakpoint of where these changes start to occur additional cost will be at "100% Design Review Complete" (Milestone 130 in BMS-**0000314**). If a product change happens after this milestone, an ECR is acceptable but is not acceptable before.
- All ECR's will require a full detailed concept and detailed cost breakdown from the line builder that has been full vetted by our GSM team and ME team for approval. Once this is complete, the line builder will be given permission to move forward with execution.
- The Line Builder and Tesla will keep a log, via JIRA, of all ECR's for final payment at the handover of the project.

©Copyright 2024 Tesla, Inc. All rights reserved. Proprietary and confidential business information subject to and disclosed under applicable Non-disclosure Agreement and/or exempt from FOIA disclosure

9.6 Intellectual Property

As the world-wide leader in electric vehicles and energy products, Tesla strongly values its intellectual property ("IP") and requires all Line Integrators to treat Tesla IP with the strictest of care.

1) Line Integrator shall keep all designs and concepts specific to Tesla confidential and solely available to Tesla.
2) Line Integrator shall provide Tesla with all designs and concepts specifically developed for Tesla, by delivering the documentation detailed in Section 9.3.
3) Line Integrator shall detail its policy to comply with Tesla NDA and protect Tesla products and data during and after completion of the project.
4) Line Integrator shall not conduct any tour of Tesla facilities without the written permission of Tesla.
5) All tool and line designs prepared by the line builder become the property of Tesla, and by accepting the PO, Line Integrator grants full authority to Tesla to share these designs with other line integrators engaged to build the same or similar lines in other global locations.
6) No mention of business relationship with Tesla on websites or marketing material without prior approval from Tesla.

9.7 Delay & Other Penalties

1) Timing is of the utmost importance and in accordance with Tesla General Terms and Condition, liquidated damage of 2% of total project cost per week up to 5 weeks shall be incurred if the Line Integrator is the cause of Schedule specified in this RFQ or in written agreement between Tesla and the Line Integrator.
2) In case of any delay or failure during the project related to the Line Integrator to achieve any milestone on agreed date and quality of work, it is Line Integrator's responsibility to determine, communicate and execute corrective actions, as well as expedite the following project phases to recover the project timing and meet the Start of Build (SOB) and run at rate dates and requirements at the Line Integrator's own cost. If the Line Integrator fails to define and execute proper corrective actions to recover the project timing, Tesla will issue a warning and may decide to intervene to support, expedite or take control over a portion of the project to meet overall project timing. In such instances, it is the Line Integrator's responsibility to cover all costs of Tesla's intervention and corrective actions.

9.8 Service and Warranty

1) Line Integrator provided machine and/or equipment shall be warrantied for a minimum period of 3 years by the Line Integrator after the project's completion (Handover milestone).

©Copyright 2024 Tesla, Inc. All rights reserved. Proprietary and confidential business information subject to and disclosed under applicable Non-disclosure Agreement and/or exempt from FOIA disclosure

2) Line Integrator integrated system shall be warrantied for a minimum period of 1 year by the Line Integrator after the project's completion (Handover milestone).
3) Line Integrator shall provide service in accordance with Service Commitment and Response agreed between Tesla and the Line Integrator in General Terms and Conditions ("GTC").

END OF DOCUMENT

©Copyright 2024 Tesla, Inc. All rights reserved. Proprietary and confidential business information subject to and disclosed under applicable Non-disclosure Agreement and/or exempt from FOIA disclosure

10 Appendices

10.1 Line Integrator Bid Submission Confirmation

Please complete the following bid submission confirmation:

- **Confirm** – Write Confirm in the box provided if you agree to the related requirement.
- **Modify** – Write Modify if you disagree and provide a brief explanation.
- **N/A** – Write N/A if the note is not applicable.

For the quote to be considered, all boxes must contain a response.

Tesla Requirement	Line integrator Confirmation
Line Integrator has an in-effect copy of the Tesla Non-Disclosure Agreement ("NDA"). Signed within 3 years.	
Line Integrator has returned a signed copy of the Tesla General Terms and Conditions for Procurement of Production Equipment and Services ("GTC").	
Line Integrator has read and agrees to comply with the Tesla Employee Health and Safety Contractor Guidelines and Safety Requirements.	
Line Integrator's solution meets intellectual property requirements outlined in GTC and respects Tesla's Background IP.	
Line Integrator will have Workforce Management registration completed upon award of business.	
Line Integrator has read and agrees to comply with Tesla Project Management Standards (BMS-0000314).	
Line Integrator complies with all Standards and is prepared to complete all Templates outlined in this document. This includes the Tesla Design Standards (including quality and color standards, if required).	
Line Integrator has submitted a complete quotation according to this RFQ	
Line Integrator accepts Tesla Payment Terms and understands the penalties outlined in this RFQ and the GTC.	
All data provided will be with proper licenses.	
All documentation will be in English.	
All meetings will be conducted in English (Line Builder is required to have a technical translator if necessary)	
Line Integrator will submit a recommended spare parts list upon completion of final design review	
Line integrator agrees to provide a long leads list at final technical proposal review	
Line Integrator agrees to comply with project deliverables required in this document.	
Line Integrator agrees to comply with the Design Review, FAT Acceptance (if applicable), SAT Acceptance criteria required in this document.	
Line Integrator has included a provision for training Tesla engineers, maintenance, and operators.	
Line Integrator has included a provision for a 36-month warranty for equipment and a 12-month warranty for the integrated system.	

©Copyright 2024 Tesla, Inc. All rights reserved. Proprietary and confidential business information subject to and disclosed under applicable Non-disclosure Agreement and/or exempt from FOIA disclosure

END OF DOCUMENT

©Copyright 2024 Tesla, Inc. All rights reserved. Proprietary and confidential business information subject to and disclosed under applicable Non-disclosure Agreement and/or exempt from FOIA disclosure